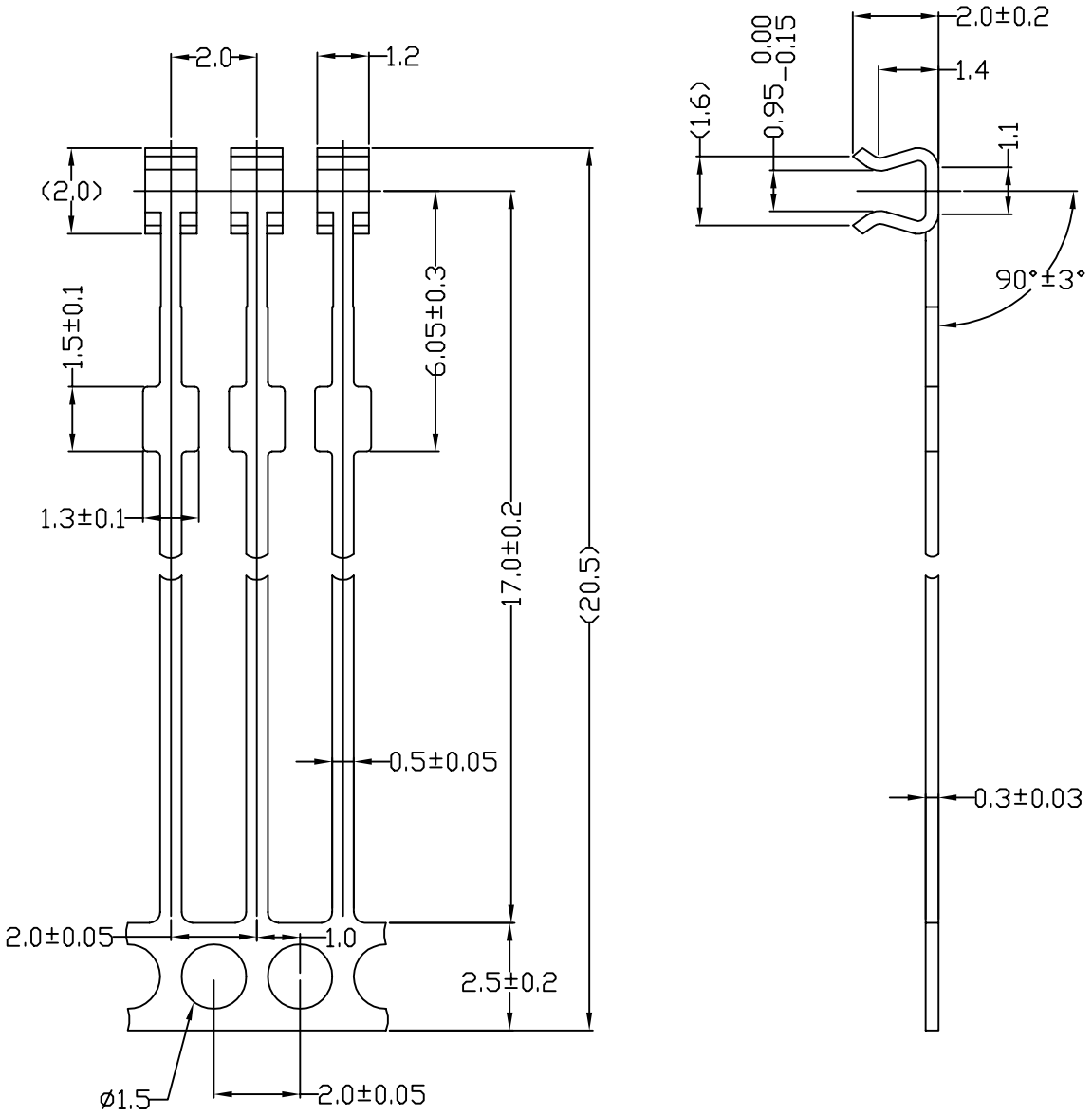

ALLOWANCE	F	G	H	J	K	L	M	N
UNDER 8	±0.05	±0.1	±0.1	±0.2	±0.2	±0.4	±0.4	±1.0
8 TO 25	0.08	0.15	0.15	0.3	0.3	0.6	0.6	1.5
25 TO 80	0.12	0.2	0.25	0.4	0.5	0.8	1.0	2.0
80 TO 250	0.25	0.3	0.4	0.6	0.8	1.2	1.5	3.0
250 TO 800	0.5	0.6	0.8	1.0	1.5	2.0	3.0	6.0
800 TO 2500	1.0	1.0	1.5	1.7	3.0	4.0	6.0	12.0
OVER 2500	2.0	2.0	3.0	3.0	6.0	8.0	12.0	24.0

REV	ZONE - CHANGES	ER*	DATE
			99/10/31

NEXT ISSUED ..

UNLESS OTHERWISE STATED:
1/ WALL THICKNESS:
2/ ALL DIM. IN MM
3/ TOLERANCE:
X.X+/-
XX.X+/-
XXX.X+/-
4/ TEXTURE:
5/ COATING:
6/ DRAFT ANGLE:
7/ UNSPECIFIED CORNER:

ORIENT DISPLAY

FINISH		
DRAWN	WU	
CHECK		
APPROVAL		

TITLE Pin-223-1.0

MODEL | DWG NO.

SCALE: 6:1 | REV. A | PAGE 1 OF 1

MAT'L & COLOR