Sitronix

ST7625

65K Color Dot Matrix LCD Controller/Driver

1. INTRODUCTION

The ST7625 is a driver & controller LSI for 65K color graphic dot-matrix liquid crystal display systems. It generates 306 Segment and 96 Common driver circuits. This chip is connected directly to a microprocessor, accepts Serial Peripheral Interface (SPI) or 8-bit/16-bit parallel display data and stores in an on-chip display data RAM. It performs display data RAM read/write operation with no external operating clock to minimize power consumption. In addition, because it contains power supply circuits necessary to drive liquid crystal, it is possible to make a display system with the fewest components.

2. FEATURES

Driver Output Circuits

- 306 Segment Outputs / 96 Common Outputs

Applicable Duty Ratios

- Various Partial Display
- Partial Window Moving & Data Scrolling

Gray-Scale Display

- 4FRC & 31 PWM function circuit to display
- 64 gray-scale display
- Support 8 color mode (Idle mode)

On-chip Display Data RAM

- Capacity: 102 x 96 x 16 =156,672 bits

Color support by Interface

- 256 color mode, (RGB)=(332) mode
- 4K color mode, (RGB)=(444) mode
- 65K color mode, (RGB)=(565) mode
- Truncated 262K color mode, (RGB)=(666) mode
- Truncated 16M color mode, (RGB)=(888) mode

Microprocessor Interface

- 8/16-bit parallel bi-directional interface with 6800-series or 8080-series
- 4-line serial interface
- 3-line (9-bits) serial interface

On-chip Low Power Analog Circuit

- On-chip Oscillator Circuit
- On-chip Voltage Converter (x2, x3, x4, x5, x6, x7, X8) with internal booster capacitors.
- Extremely Few Outsider Components. (Required outsider components: Three Capacitors)
- On-chip Voltage Regulator
- On-chip Electronic Contrast Control Function
- Voltage Follower (LCD bias: 1/5~1/12)

Operating Voltage Range

- Supply Digital Voltage (VDD, VDD1): 1.65 to 3.0V
- Supply Analog Voltage (VDD2, VDD3, VDD4, VDD5): 2.4 to 3.3V
- LCD Driving Voltage (VOP = V0 - VSS): Max to 18V

LCD Driving Voltage (OTP)

- Contrast Adjustment Value is stored in the Built-In OTP-ROM for better display quality.

LCD Driving setting suggestion

- VOP = 11V, BIAS=1/9. (VDD=2.8V)

Package Type

- Application for COG

ST7625-G3	**Chip thickness=400um**	ST
ST7625-G4	**Chip thickness=300um**	
Sitronix Technology Corp. reserves the right to change the contents in this document without prior notice.		

3. ST7625 Pad Arrangement (COG)

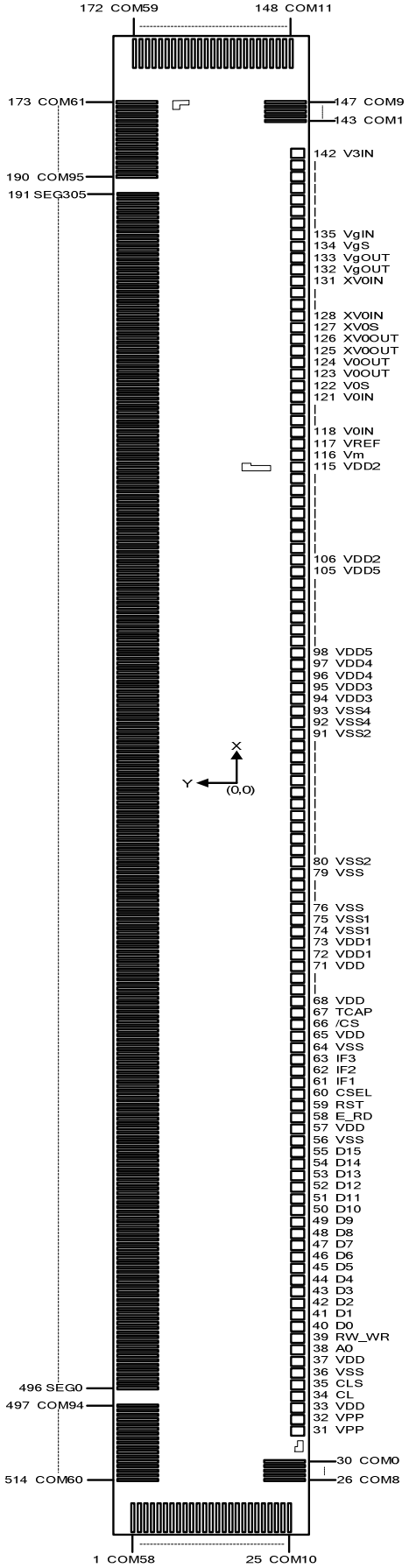

Chip Size :

9,930 um x 820 um

Bump Pitch :

PAD NO. 1 ~ 30, 143 ~ 514 : 27 um (COM/SEG)

PAD NO. 31 ~ 142 : 80 um (I/O)

Bump Size :

PAD NO. 1 ~ 25, 148 ~ 172 :

120.5 um(x) ~ 15 um(y) (COM)

PAD NO. 26 ~ 30, 143 ~ 147, 173 ~ 514 :

15 um(x) ~ 120.5 um(y) (COM/SEG)

PAD NO. 31 ~ 142 :

65 um(x) ~ 63 um(y) (I/O)

Bump Height : 15 um

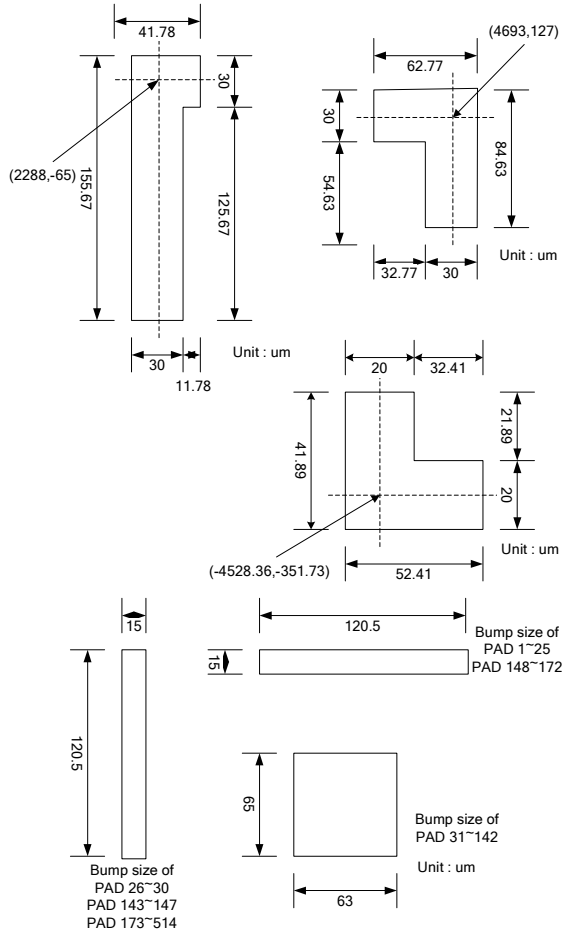

4. Pad Center Coordinates

PAD No.	PIN Name	X	Y
001	COM[58]	-4861.75	320.50
002	COM[56]	-4861.75	293.50
003	COM[54]	-4861.75	266.50
004	COM[52]	-4861.75	239.50
005	COM[50]	-4861.75	212.50
006	COM[48]	-4861.75	185.50
007	COM[46]	-4861.75	158.50
008	COM[44]	-4861.75	131.50
009	COM[42]	-4861.75	104.50
010	COM[40]	-4861.75	77.50
011	COM[38]	-4861.75	50.50
012	COM[36]	-4861.75	23.50
013	COM[34]	-4861.75	-3.50
014	COM[32]	-4861.75	-30.50
015	COM[30]	-4861.75	-57.50
016	COM[28]	-4861.75	-84.50
017	COM[26]	-4861.75	-111.50
018	COM[24]	-4861.75	-138.50
019	COM[22]	-4861.75	-165.50
020	COM[20]	-4861.75	-192.50
021	COM[18]	-4861.75	-219.50
022	COM[16]	-4861.75	-246.50
023	COM[14]	-4861.75	-273.50
024	COM[12]	-4861.75	-300.50
025	COM[10]	-4861.75	-327.50
026	COM[8]	-4684.02	-306.75
027	COM[6]	-4657.02	-306.75
028	COM[4]	-4630.02	-306.75
029	COM[2]	-4603.02	-306.75
030	COM[0]	-4576.02	-306.75
031	VPP	-4424.71	-329.50
032	VPP	-4344.71	-329.50
033	VDD	-4264.71	-329.50

PAD No.	PIN Name	X	Y
034	CL	-4184.71	-329.50
035	CLS	-4104.71	-329.50
036	VSS	-4024.71	-329.50
037	VDD	-3944.71	-329.50
038	A0	-3864.71	-329.50
039	RW_WR	-3784.71	-329.50
040	D0	-3704.71	-329.50
041	D1	-3624.71	-329.50
042	D2	-3544.71	-329.50
043	D3	-3464.71	-329.50
044	D4	-3384.71	-329.50
045	D5	-3304.71	-329.50
046	D6	-3224.71	-329.50
047	D7	-3144.71	-329.50
048	D8	-3064.71	-329.50
049	D9	-2984.71	-329.50
050	D10	-2904.71	-329.50
051	D11	-2824.71	-329.50
052	D12	-2744.71	-329.50
053	D13	-2664.71	-329.50
054	D14	-2584.71	-329.50
055	D15	-2504.71	-329.50
056	VSS	-2424.71	-329.50
057	VDD	-2344.71	-329.50
058	E_RD	-2264.71	-329.50
059	/RST	-2184.71	-329.50
060	CSEL	-2104.71	-329.50
061	IF1	-2024.71	-329.50
062	IF2	-1944.71	-329.50
063	IF3	-1864.71	-329.50
064	VSS	-1784.71	-329.50
065	VDD	-1704.71	-329.50
066	/CS	-1624.71	-329.50

PAD No.	PIN Name	X	Y
067	TCAP	-1544.71	-329.50
068	VDD	-1464.71	-329.50
069	VDD	-1384.71	-329.50
070	VDD	-1304.71	-329.50
071	VDD	-1224.71	-329.50
072	VDD1	-1144.71	-329.50
073	VDD1	-1064.71	-329.50
074	VSS1	-984.71	-329.50
075	VSS1	-904.71	-329.50
076	VSS	-824.71	-329.50
077	VSS	-744.71	-329.50
078	VSS	-664.71	-329.50
079	VSS	-584.71	-329.50
080	VSS2	-504.71	-329.50
081	VSS2	-424.71	-329.50
082	VSS2	-344.71	-329.50
083	VSS2	-264.71	-329.50
084	VSS2	-184.71	-329.50
085	VSS2	-104.71	-329.50
086	VSS2	-24.71	-329.50
087	VSS2	55.29	-329.50
088	VSS2	135.29	-329.50
089	VSS2	215.29	-329.50
090	VSS2	295.29	-329.50
091	VSS2	375.29	-329.50
092	VSS4	455.29	-329.50
093	VSS4	535.29	-329.50
094	VDD3	615.29	-329.50
095	VDD3	695.29	-329.50
096	VDD4	775.29	-329.50
097	VDD4	855.29	-329.50
098	VDD5	935.29	-329.50
099	VDD5	1015.29	-329.50
100	VDD5	1095.29	-329.50
101	VDD5	1175.29	-329.50

PAD No.	PIN Name	X	Y
102	VDD5	1255.29	-329.50
103	VDD5	1335.29	-329.50
104	VDD5	1415.29	-329.50
105	VDD5	1495.29	-329.50
106	VDD2	1575.29	-329.50
107	VDD2	1655.29	-329.50
108	VDD2	1735.29	-329.50
109	VDD2	1815.29	-329.50
110	VDD2	1895.29	-329.50
111	VDD2	1975.29	-329.50
112	VDD2	2055.29	-329.50
113	VDD2	2135.29	-329.50
114	VDD2	2215.29	-329.50
115	VDD2	2295.29	-329.50
116	Vm	2375.29	-329.50
117	VREF	2455.29	-329.50
118	V0IN	2535.29	-329.50
119	V0IN	2615.29	-329.50
120	V0IN	2695.29	-329.50
121	V0IN	2775.29	-329.50
122	V0S	2855.29	-329.50
123	V0OUT	2935.29	-329.50
124	V0OUT	3015.29	-329.50
125	XV0OUT	3095.29	-329.50
126	XV0OUT	3175.29	-329.50
127	XV0S	3255.29	-329.50
128	XV0IN	3335.29	-329.50
129	XV0IN	3415.29	-329.50
130	XV0IN	3495.29	-329.50
131	XV0IN	3575.29	-329.50
132	VgOUT	3655.29	-329.50
133	VgOUT	3735.29	-329.50
134	VgS	3815.29	-329.50
135	VgIN	3895.29	-329.50
136	VgIN	3975.29	-329.50

PAD No.	PIN Name	X	Y
137	VgIN	4055.29	-329.50
138	VgIN	4135.29	-329.50
139	VgIN	4215.29	-329.50
140	VgIN	4295.29	-329.50
141	VgIN	4375.29	-329.50
142	VgIN	4455.29	-329.50
143	COM[1]	4576.02	-306.75
144	COM[3]	4603.02	-306.75
145	COM[5]	4630.02	-306.75
146	COM[7]	4657.02	-306.75
147	COM[9]	4684.02	-306.75
148	COM[11]	4861.75	-327.50
149	COM[13]	4861.75	-300.50
150	COM[15]	4861.75	-273.50
151	COM[17]	4861.75	-246.50
152	COM[19]	4861.75	-219.50
153	COM[21]	4861.75	-192.50
154	COM[23]	4861.75	-165.50
155	COM[25]	4861.75	-138.50
156	COM[27]	4861.75	-111.50
157	COM[29]	4861.75	-84.50
158	COM[31]	4861.75	-57.50
159	COM[33]	4861.75	-30.50
160	COM[35]	4861.75	-3.50
161	COM[37]	4861.75	23.50
162	COM[39]	4861.75	50.50
163	COM[41]	4861.75	77.50
164	COM[43]	4861.75	104.50
165	COM[45]	4861.75	131.50
166	COM[47]	4861.75	158.50
167	COM[49]	4861.75	185.50
168	COM[51]	4861.75	212.50
169	COM[53]	4861.75	239.50
170	COM[55]	4861.75	266.50
171	COM[57]	4861.75	293.50

PAD No.	PIN Name	X	Y
172	COM[59]	4861.75	320.50
173	COM[61]	4684.02	306.75
174	COM[63]	4657.02	306.75
175	COM[65]	4630.02	306.75
176	COM[67]	4603.02	306.75
177	COM[69]	4576.02	306.75
178	COM[71]	4549.02	306.75
179	COM[73]	4522.02	306.75
180	COM[75]	4495.02	306.75
181	COM[77]	4468.02	306.75
182	COM[79]	4441.02	306.75
183	COM[81]	4414.02	306.75
184	COM[83]	4387.02	306.75
185	COM[85]	4360.02	306.75
186	COM[87]	4333.02	306.75
187	COM[89]	4306.02	306.75
188	COM[91]	4279.02	306.75
189	COM[93]	4252.02	306.75
190	COM[95]	4225.02	306.75
191	SEG[305]	4117.50	306.75
192	SEG[304]	4090.50	306.75
193	SEG[303]	4063.50	306.75
194	SEG[302]	4036.50	306.75
195	SEG[301]	4009.50	306.75
196	SEG[300]	3982.50	306.75
197	SEG[299]	3955.50	306.75
198	SEG[298]	3928.50	306.75
199	SEG[297]	3901.50	306.75
200	SEG[296]	3874.50	306.75
201	SEG[295]	3847.50	306.75
202	SEG[294]	3820.50	306.75
203	SEG[293]	3793.50	306.75
204	SEG[292]	3766.50	306.75
205	SEG[291]	3739.50	306.75
206	SEG[290]	3712.50	306.75

PAD No.	PIN Name	X	Y
207	SEG[289]	3685.50	306.75
208	SEG[288]	3658.50	306.75
209	SEG[287]	3631.50	306.75
210	SEG[286]	3604.50	306.75
211	SEG[285]	3577.50	306.75
212	SEG[284]	3550.50	306.75
213	SEG[283]	3523.50	306.75
214	SEG[282]	3496.50	306.75
215	SEG[281]	3469.50	306.75
216	SEG[280]	3442.50	306.75
217	SEG[279]	3415.50	306.75
218	SEG[278]	3388.50	306.75
219	SEG[277]	3361.50	306.75
220	SEG[276]	3334.50	306.75
221	SEG[275]	3307.50	306.75
222	SEG[274]	3280.50	306.75
223	SEG[273]	3253.50	306.75
224	SEG[272]	3226.50	306.75
225	SEG[271]	3199.50	306.75
226	SEG[270]	3172.50	306.75
227	SEG[269]	3145.50	306.75
228	SEG[268]	3118.50	306.75
229	SEG[267]	3091.50	306.75
230	SEG[266]	3064.50	306.75
231	SEG[265]	3037.50	306.75
232	SEG[264]	3010.50	306.75
233	SEG[263]	2983.50	306.75
234	SEG[262]	2956.50	306.75
235	SEG[261]	2929.50	306.75
236	SEG[260]	2902.50	306.75
237	SEG[259]	2875.50	306.75
238	SEG[258]	2848.50	306.75
239	SEG[257]	2821.50	306.75
240	SEG[256]	2794.50	306.75
241	SEG[255]	2767.50	306.75

PAD No.	PIN Name	X	Y
242	SEG[254]	2740.50	306.75
243	SEG[253]	2713.50	306.75
244	SEG[252]	2686.50	306.75
245	SEG[251]	2659.50	306.75
246	SEG[250]	2632.50	306.75
247	SEG[249]	2605.50	306.75
248	SEG[248]	2578.50	306.75
249	SEG[247]	2551.50	306.75
250	SEG[246]	2524.50	306.75
251	SEG[245]	2497.50	306.75
252	SEG[244]	2470.50	306.75
253	SEG[243]	2443.50	306.75
254	SEG[242]	2416.50	306.75
255	SEG[241]	2389.50	306.75
256	SEG[240]	2362.50	306.75
257	SEG[239]	2335.50	306.75
258	SEG[238]	2308.50	306.75
259	SEG[237]	2281.50	306.75
260	SEG[236]	2254.50	306.75
261	SEG[235]	2227.50	306.75
262	SEG[234]	2200.50	306.75
263	SEG[233]	2173.50	306.75
264	SEG[232]	2146.50	306.75
265	SEG[231]	2119.50	306.75
266	SEG[230]	2092.50	306.75
267	SEG[229]	2065.50	306.75
268	SEG[228]	2038.50	306.75
269	SEG[227]	2011.50	306.75
270	SEG[226]	1984.50	306.75
271	SEG[225]	1957.50	306.75
272	SEG[224]	1930.50	306.75
273	SEG[223]	1903.50	306.75
274	SEG[222]	1876.50	306.75
275	SEG[221]	1849.50	306.75
276	SEG[220]	1822.50	306.75

PAD No.	PIN Name	X	Y
277	SEG[219]	1795.50	306.75
278	SEG[218]	1768.50	306.75
279	SEG[217]	1741.50	306.75
280	SEG[216]	1714.50	306.75
281	SEG[215]	1687.50	306.75
282	SEG[214]	1660.50	306.75
283	SEG[213]	1633.50	306.75
284	SEG[212]	1606.50	306.75
285	SEG[211]	1579.50	306.75
286	SEG[210]	1552.50	306.75
287	SEG[209]	1525.50	306.75
288	SEG[208]	1498.50	306.75
289	SEG[207]	1471.50	306.75
290	SEG[206]	1444.50	306.75
291	SEG[205]	1417.50	306.75
292	SEG[204]	1390.50	306.75
293	SEG[203]	1363.50	306.75
294	SEG[202]	1336.50	306.75
295	SEG[201]	1309.50	306.75
296	SEG[200]	1282.50	306.75
297	SEG[199]	1255.50	306.75
298	SEG[198]	1228.50	306.75
299	SEG[197]	1201.50	306.75
300	SEG[196]	1174.50	306.75
301	SEG[195]	1147.50	306.75
302	SEG[194]	1120.50	306.75
303	SEG[193]	1093.50	306.75
304	SEG[192]	1066.50	306.75
305	SEG[191]	1039.50	306.75
306	SEG[190]	1012.50	306.75
307	SEG[189]	985.50	306.75
308	SEG[188]	958.50	306.75
309	SEG[187]	931.50	306.75
310	SEG[186]	904.50	306.75
311	SEG[185]	877.50	306.75

PAD No.	PIN Name	X	Y
312	SEG[184]	850.50	306.75
313	SEG[183]	823.50	306.75
314	SEG[182]	796.50	306.75
315	SEG[181]	769.50	306.75
316	SEG[180]	742.50	306.75
317	SEG[179]	715.50	306.75
318	SEG[178]	688.50	306.75
319	SEG[177]	661.50	306.75
320	SEG[176]	634.50	306.75
321	SEG[175]	607.50	306.75
322	SEG[174]	580.50	306.75
323	SEG[173]	553.50	306.75
324	SEG[172]	526.50	306.75
325	SEG[171]	499.50	306.75
326	SEG[170]	472.50	306.75
327	SEG[169]	445.50	306.75
328	SEG[168]	418.50	306.75
329	SEG[167]	391.50	306.75
330	SEG[166]	364.50	306.75
331	SEG[165]	337.50	306.75
332	SEG[164]	310.50	306.75
333	SEG[163]	283.50	306.75
334	SEG[162]	256.50	306.75
335	SEG[161]	229.50	306.75
336	SEG[160]	202.50	306.75
337	SEG[159]	175.50	306.75
338	SEG[158]	148.50	306.75
339	SEG[157]	121.50	306.75
340	SEG[156]	94.50	306.75
341	SEG[155]	67.50	306.75
342	SEG[154]	40.50	306.75
343	SEG[153]	13.50	306.75
344	SEG[152]	-13.50	306.75
345	SEG[151]	-40.50	306.75
346	SEG[150]	-67.50	306.75

PAD No.	PIN Name	X	Y
347	SEG[149]	-94.50	306.75
348	SEG[148]	-121.50	306.75
349	SEG[147]	-148.50	306.75
350	SEG[146]	-175.50	306.75
351	SEG[145]	-202.50	306.75
352	SEG[144]	-229.50	306.75
353	SEG[143]	-256.50	306.75
354	SEG[142]	-283.50	306.75
355	SEG[141]	-310.50	306.75
356	SEG[140]	-337.50	306.75
357	SEG[139]	-364.50	306.75
358	SEG[138]	-391.50	306.75
359	SEG[137]	-418.50	306.75
360	SEG[136]	-445.50	306.75
361	SEG[135]	-472.50	306.75
362	SEG[134]	-499.50	306.75
363	SEG[133]	-526.50	306.75
364	SEG[132]	-553.50	306.75
365	SEG[131]	-580.50	306.75
366	SEG[130]	-607.50	306.75
367	SEG[129]	-634.50	306.75
368	SEG[128]	-661.50	306.75
369	SEG[127]	-688.50	306.75
370	SEG[126]	-715.50	306.75
371	SEG[125]	-742.50	306.75
372	SEG[124]	-769.50	306.75
373	SEG[123]	-796.50	306.75
374	SEG[122]	-823.50	306.75
375	SEG[121]	-850.50	306.75
376	SEG[120]	-877.50	306.75
377	SEG[119]	-904.50	306.75
378	SEG[118]	-931.50	306.75
379	SEG[117]	-958.50	306.75
380	SEG[116]	-985.50	306.75
381	SEG[115]	-1012.50	306.75

PAD No.	PIN Name	X	Y
382	SEG[114]	-1039.50	306.75
383	SEG[113]	-1066.50	306.75
384	SEG[112]	-1093.50	306.75
385	SEG[111]	-1120.50	306.75
386	SEG[110]	-1147.50	306.75
387	SEG[109]	-1174.50	306.75
388	SEG[108]	-1201.50	306.75
389	SEG[107]	-1228.50	306.75
390	SEG[106]	-1255.50	306.75
391	SEG[105]	-1282.50	306.75
392	SEG[104]	-1309.50	306.75
393	SEG[103]	-1336.50	306.75
394	SEG[102]	-1363.50	306.75
395	SEG[101]	-1390.50	306.75
396	SEG[100]	-1417.50	306.75
397	SEG[99]	-1444.50	306.75
398	SEG[98]	-1471.50	306.75
399	SEG[97]	-1498.50	306.75
400	SEG[96]	-1525.50	306.75
401	SEG[95]	-1552.50	306.75
402	SEG[94]	-1579.50	306.75
403	SEG[93]	-1606.50	306.75
404	SEG[92]	-1633.50	306.75
405	SEG[91]	-1660.50	306.75
406	SEG[90]	-1687.50	306.75
407	SEG[89]	-1714.50	306.75
408	SEG[88]	-1741.50	306.75
409	SEG[87]	-1768.50	306.75
410	SEG[86]	-1795.50	306.75
411	SEG[85]	-1822.50	306.75
412	SEG[84]	-1849.50	306.75
413	SEG[83]	-1876.50	306.75
414	SEG[82]	-1903.50	306.75
415	SEG[81]	-1930.50	306.75
416	SEG[80]	-1957.50	306.75

PAD No.	PIN Name	X	Y
417	SEG[79]	-1984.50	306.75
418	SEG[78]	-2011.50	306.75
419	SEG[77]	-2038.50	306.75
420	SEG[76]	-2065.50	306.75
421	SEG[75]	-2092.50	306.75
422	SEG[74]	-2119.50	306.75
423	SEG[73]	-2146.50	306.75
424	SEG[72]	-2173.50	306.75
425	SEG[71]	-2200.50	306.75
426	SEG[70]	-2227.50	306.75
427	SEG[69]	-2254.50	306.75
428	SEG[68]	-2281.50	306.75
429	SEG[67]	-2308.50	306.75
430	SEG[66]	-2335.50	306.75
431	SEG[65]	-2362.50	306.75
432	SEG[64]	-2389.50	306.75
433	SEG[63]	-2416.50	306.75
434	SEG[62]	-2443.50	306.75
435	SEG[61]	-2470.50	306.75
436	SEG[60]	-2497.50	306.75
437	SEG[59]	-2524.50	306.75
438	SEG[58]	-2551.50	306.75
439	SEG[57]	-2578.50	306.75
440	SEG[56]	-2605.50	306.75
441	SEG[55]	-2632.50	306.75
442	SEG[54]	-2659.50	306.75
443	SEG[53]	-2686.50	306.75
444	SEG[52]	-2713.50	306.75
445	SEG[51]	-2740.50	306.75
446	SEG[50]	-2767.50	306.75
447	SEG[49]	-2794.50	306.75
448	SEG[48]	-2821.50	306.75
449	SEG[47]	-2848.50	306.75
450	SEG[46]	-2875.50	306.75
451	SEG[45]	-2902.50	306.75

PAD No.	PIN Name	X	Y
452	SEG[44]	-2929.50	306.75
453	SEG[43]	-2956.50	306.75
454	SEG[42]	-2983.50	306.75
455	SEG[41]	-3010.50	306.75
456	SEG[40]	-3037.50	306.75
457	SEG[39]	-3064.50	306.75
458	SEG[38]	-3091.50	306.75
459	SEG[37]	-3118.50	306.75
460	SEG[36]	-3145.50	306.75
461	SEG[35]	-3172.50	306.75
462	SEG[34]	-3199.50	306.75
463	SEG[33]	-3226.50	306.75
464	SEG[32]	-3253.50	306.75
465	SEG[31]	-3280.50	306.75
466	SEG[30]	-3307.50	306.75
467	SEG[29]	-3334.50	306.75
468	SEG[28]	-3361.50	306.75
469	SEG[27]	-3388.50	306.75
470	SEG[26]	-3415.50	306.75
471	SEG[25]	-3442.50	306.75
472	SEG[24]	-3469.50	306.75
473	SEG[23]	-3496.50	306.75
474	SEG[22]	-3523.50	306.75
475	SEG[21]	-3550.50	306.75
476	SEG[20]	-3577.50	306.75
477	SEG[19]	-3604.50	306.75
478	SEG[18]	-3631.50	306.75
479	SEG[17]	-3658.50	306.75
480	SEG[16]	-3685.50	306.75
481	SEG[15]	-3712.50	306.75
482	SEG[14]	-3739.50	306.75
483	SEG[13]	-3766.50	306.75
484	SEG[12]	-3793.50	306.75
485	SEG[11]	-3820.50	306.75
486	SEG[10]	-3847.50	306.75

PAD No.	PIN Name	X	Y
487	SEG[9]	-3874.50	306.75
488	SEG[8]	-3901.50	306.75
489	SEG[7]	-3928.50	306.75
490	SEG[6]	-3955.50	306.75
491	SEG[5]	-3982.50	306.75
492	SEG[4]	-4009.50	306.75
493	SEG[3]	-4036.50	306.75
494	SEG[2]	-4063.50	306.75
495	SEG[1]	-4090.50	306.75
496	SEG[0]	-4117.50	306.75
497	COM[94]	-4225.02	306.75
498	COM[92]	-4252.02	306.75
499	COM[90]	-4279.02	306.75
500	COM[88]	-4306.02	306.75
501	COM[86]	-4333.02	306.75
502	COM[84]	-4360.02	306.75
503	COM[82]	-4387.02	306.75
504	COM[80]	-4414.02	306.75
505	COM[78]	-4441.02	306.75
506	COM[76]	-4468.02	306.75
507	COM[74]	-4495.02	306.75
508	COM[72]	-4522.02	306.75
509	COM[70]	-4549.02	306.75
510	COM[68]	-4576.02	306.75
511	COM[66]	-4603.02	306.75
512	COM[64]	-4630.02	306.75
513	COM[62]	-4657.02	306.75
514	COM[60]	-4684.02	306.75

5. BLOCK DIAGRAM

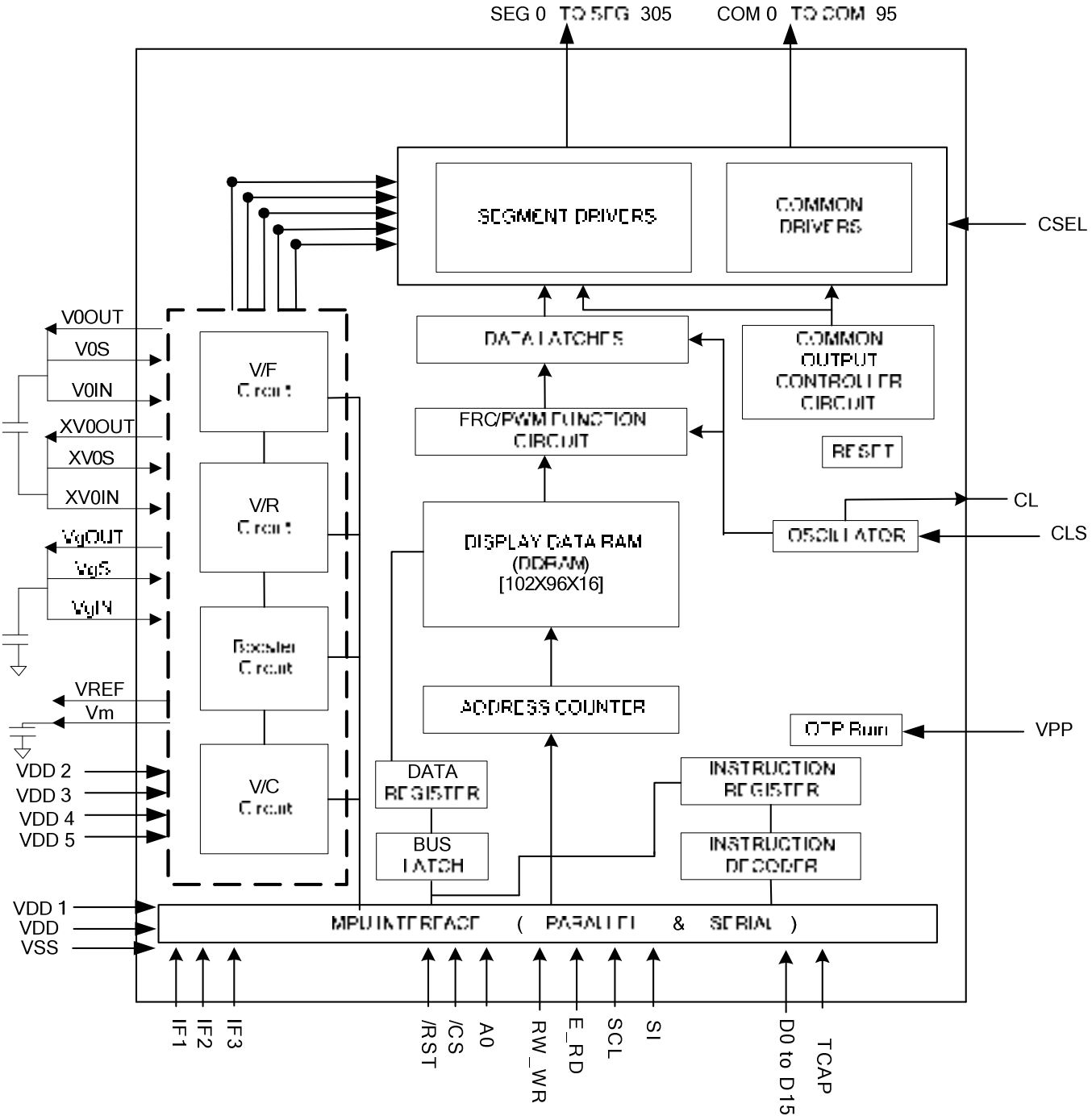

6. PIN DESCRIPTION

6.1 POWER SUPPLY

Name	I/O	Description
VDD	Supply	Power supply for logic circuit (Digital VDD 1.65V~3.0V)
VDD1	Supply	Power supply for OSC circuit (Digital VDD 1.65V~3.0V)
VDD2	Supply	Power supply for Booster Circuit (Analog VDD 2.4V~3.3V)
VDD3	Supply	Power supply for LCD. (Analog VDD 2.4V~3.3V)
VDD4	Supply	Power supply for LCD. (Analog VDD 2.4V~3.3V)
VDD5	Supply	Power supply for LCD. (Analog VDD 2.4V~3.3V)
VSS	Supply	Ground for logic circuit. Ground system should be connected together.
VSS1	Supply	Ground for OSC circuit. Ground system should be connected together.
VSS2	Supply	Ground for Booster Circuit. Ground system should be connected together.
VSS4	Supply	Ground for LCD. Ground system should be connected together.

6.2 LCD Power Supply Pins

Name	I/O	Description
$V0_{OUT}$ $V0_{IN}$ $V0_S$	I/O	Positive LCD driver supply voltages. $V0_{OUT}$ is the output voltage of V0 generated by ST7625. $V0_{IN}$ is the input pin of power supply to generate V0 voltage for LCD. $V0_S$ is the input pin of power supply to sense the V0 voltage. $V0_{OUT}$ 、$V0_{IN}$ & $V0_S$ should be connected together by FPC.
$XV0_{OUT}$ $XV0_{IN}$ $XV0_S$	I/O	Negative LCD driver supply voltages. $XV0_{OUT}$ is the output voltage of XV0 generated by ST7625. $XV0_{IN}$ is the input pin of power supply to generate XV0 voltage for LCD. $XV0_S$ is the input pin of power supply to sense the XV0 voltage. $XV0_{OUT}$ 、$XV0_{IN}$ & $XV0_S$ should be connected together by FPC.
Vg_{OUT} Vg_{IN} Vg_S Vm	I/O	Bias LCD driver supply voltages. Vg_{OUT} is the output voltage of Vg generated by ST7625. Vg_{IN} is the input pin of power supply to generate Vg voltage for LCD. Vg_S is the input pin of power supply to sense the Vg voltage. Vg_{OUT} 、Vg_{IN} & Vg_S should be connected together by FPC. Vm is the I/O pin of LCD bias supply voltage Voltages should have the following relationship; V0 > Vg > Vm > VSS > XV0, 0.7V < Vm < VDDA-0.7V and 1.8V < Vg < 2 x VDDA. When the internal power circuit is active, these voltages are generated as following table according to the state of LCD bias. **LCD bias** | **Vg** | **Vm** **1/N bias** | (2/N) x V0 | (1/N) x V0 NOTE: N = 5 to 12

6.3 SYSTEM CONTROL

Name	I/O	Description
CLS	I	When using internal clock oscillator, connect CLS to VDD. When using external clock oscillator, connect CLS to VSS.
CL	I/O	When using internal clock oscillator, it's oscillator output. When using external clock oscillator, it is clock input.
CSEL	I	This pin should connect to VDD.
TCAP	I/O	Test pin. Leave it open.
VREF	O	Reference voltage output for monitor only. Leave it open.
VPP	I	When writing OTP, it needs external power supply voltage 7.5V~7.75V (>4 mA) input to write successfully.

6.4 MICROPROCESSOR INTERFACE

<table>
<tr><th>Name</th><th>I/O</th><th>Description</th></tr>
<tr><td>RST</td><td>I</td><td>Reset input pin, when RST is “L”, initialization is executed.</td></tr>
<tr><td>IF[3:1]</td><td>I</td><td>Parallel / Serial data input select input
<table>
<tr><th>IF3</th><th>IF2</th><th>IF1</th><th>MPU interface type</th></tr>
<tr><td>H</td><td>H</td><td>H</td><td>80 series 16-bit parallel</td></tr>
<tr><td>L</td><td>H</td><td>H</td><td>80 series 8-bit parallel</td></tr>
<tr><td>L</td><td>L</td><td>H</td><td>68 series 16-bit parallel</td></tr>
<tr><td>H</td><td>H</td><td>L</td><td>68 series 8-bit parallel</td></tr>
<tr><td>H</td><td>L</td><td>L</td><td>9-bit serial (3 line)</td></tr>
<tr><td>L</td><td>L</td><td>L</td><td>8-bit serial (4 line)</td></tr>
</table>
Note
Refer to table 7.1.1 for detail serial interface connections.</td></tr>
<tr><td>/CS</td><td>I</td><td>Chip select input pins
Data / Instruction I/O is enabled only when /CS is "L". When chip select is non-active, D0 to D15 become high impedance.</td></tr>
<tr><td>A0</td><td>I</td><td>Register select input pin
A0 = "H": D0 to D15 or SI are display data
A0 = "L": D0 to D15 or SI are control Command
In 3-line or 4-line interface this PIN is define to SCL.
A0 pin is used to input serial clock when the serial interface is selected (SCL). (3 line and 4 line)</td></tr>
</table>

<table>
<tr><td>RW_WR</td><td>I</td><td>Read / Write execution control pin
<table>
<tr><th>MPU type</th><th>RW_WR</th><th>Description</th></tr>
<tr><td>6800-series</td><td>RW</td><td>Read / Write control input pin
R/W = “H” : read
R/W = “L” : write</td></tr>
<tr><td>8080-series</td><td>/WR</td><td>Write enable clock input pin
The data on D0 to D15 are latched at the rising edge of the /WR signal.</td></tr>
</table>
When in the serial interface, connect it to VDD.</td></tr>
<tr><td>E_RD</td><td>I</td><td>Read / Write execution control pin
<table>
<tr><th>MPU Type</th><th>E_RD</th><th>Description</th></tr>
<tr><td>6800-series</td><td>E</td><td>Read / Write control input pin
R/W = “H”: When E is “H”, D0 to D15 are in an output status.
R/W = “L”: The data on D0 to D15 are latched at the falling edge of the E signal.</td></tr>
<tr><td>8080-series</td><td>/RD</td><td>Read enable clock input pin
When /RD is “L”, D0 to D15 are in an output status.</td></tr>
</table>
When in the serial interface, connect it to VDD.</td></tr>
<tr><td>D15 to D0</td><td>I/O</td><td>They connect to the standard 8-bit or 16 bit MPU bus via the 8/16 –bit bi-directional bus.
When the following interface is selected and the /CS pin is high, the following pins become high impedance.
1. In 8-bit parallel: D15-D8 pins are in the state of high impedance should connect to VDD.
2. In 3-line/4-line interface D0 pad will be used for SI function (SI)
3. In 4-line interface D1 pad will be used for A0 function
4. In Serial interface: unsed pins are in the state of high impedance should connect to VDD.</td></tr>
</table>

NOTE：

1. ***The MPU Interface (control bus and data bus) can not be left floating in any operation mode.***
2. ***Unused pins should connect to VDD (Supply Digital Voltage).***

6.5 LCD DRIVER OUTPUTS

<table>
<tr><th>Name</th><th>I/O</th><th>Description</th></tr>
<tr><td>SEG0
to
SEG305</td><td>O</td><td>LCD segment driver outputs
The display data and the frame inversion signal control the output voltage of segment driver.
<table>
<tr><th rowspan="2">Display data</th><th rowspan="2">Frame Inversion (Internal)</th><th colspan="2">Segment driver output voltage</th></tr>
<tr><th>Normal display</th><th>Reverse display</th></tr>
<tr><td>H</td><td>H</td><td>Vg</td><td>VSS</td></tr>
<tr><td>H</td><td>L</td><td>VSS</td><td>Vg</td></tr>
<tr><td>L</td><td>H</td><td>VSS</td><td>Vg</td></tr>
<tr><td>L</td><td>L</td><td>Vg</td><td>VSS</td></tr>
<tr><td colspan="2">Sleep-In mode</td><td>VSS</td><td>VSS</td></tr>
</table></td></tr>
<tr><td>COM0
to
COM95</td><td>O</td><td>LCD common driver outputs
The internal scanning data and M signal control the output voltage of common driver.
<table>
<tr><th>Scan data</th><th>Frame Inversion (Internal)</th><th>Common driver output voltage</th></tr>
<tr><td>H</td><td>H</td><td>XV0</td></tr>
<tr><td>H</td><td>L</td><td>V0</td></tr>
<tr><td>L</td><td>H</td><td>Vm</td></tr>
<tr><td>L</td><td>L</td><td>Vm</td></tr>
<tr><td colspan="2">Sleep-In mode</td><td>VSS</td></tr>
</table></td></tr>
</table>

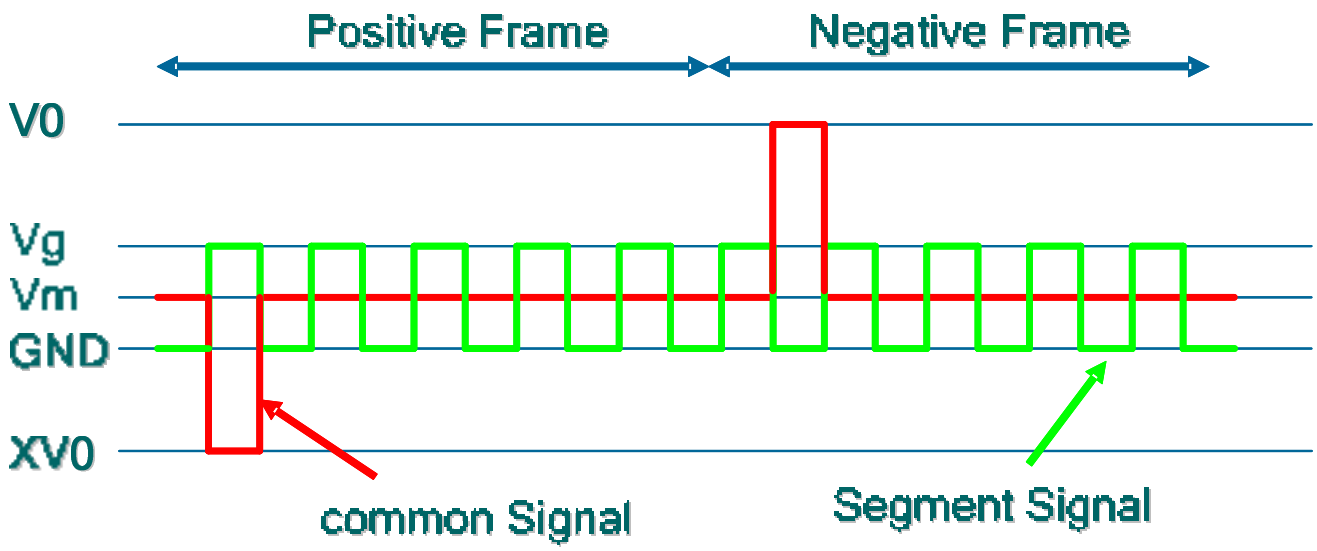

ST7625 I/O PIN ITO Resister Limitation

Pin Name	ITO Resister
VDD, VDD1~VDD5, VSS,VSS1,VSS2,VSS4	<100Ω
$V0_{IN}$, $V0_{OUT}$, $V0_S$,$XV0_{IN}$, $XV0_{OUT}$,$XV0_S$, Vg_{IN}, Vg_{OUT} ,Vg_S ,Vm	<300Ω
VPP	<50Ω
A0, E_RD, RW_WR, /CS, D0 …D15, (SI), (SCL)	<1KΩ
/RST	<10KΩ
IF[3:1], CLS, CSEL	<1KΩ
TCAP, CL, VREF	Floating

NOTE:

1. Make sure that the ITO resistance of COM0 ~ COM69 is equal, and so is it of SEG0 ~ SEG293.

These Limitations include the bottleneck of ITO layout.

2. To avoid the noise in different power system affect other power system, please separate different power source on ITO layout.

3. The V0, XV0 and Vg power circuits have output pins, input pins and a sensor input. To avoid the power noise affects the sensor of the power circuits. The trace should be separated by ITO and should be connected together by FPC.

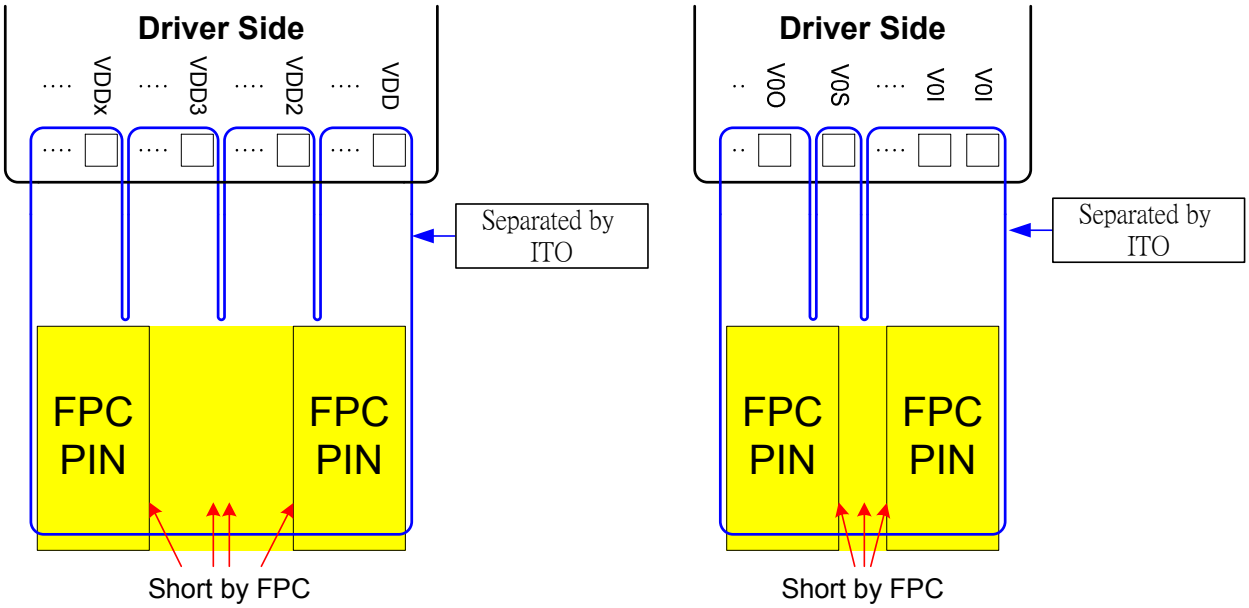

7. FUNCTIONAL DESCRIPTION

7.1 MICROPROCESSOR INTERFACE

Chip Select Input

/CS pin is chip selection. The ST7625 is active when /CS=L. In serial interface mode, the internal shift register and the counter are reset when /CS=H.

7.1.1 Selecting Parallel / Serial Interface

ST7625 has six types of interface with an MPU, which are two serial and four parallel interfaces. The parallel or serial interface is determined by IF pin as shown in Table 7.1.1.

Table 7.1.1 Parallel / Serial Interface Mode

I/F Mode			I/F Description	Pin Assignment							
IF1	IF2	IF3		/CS	A0	E_RD	RW_WR	D15 to D8	D7 to D2	D0	D1
H	H	H	80 serial 16-bit parallel	/CS	A0	/RD	/WR	D15 ~ D8	D7 ~ D2	D0	D1
H	H	L	80 serial 8-bit parallel	/CS	A0	/RD	/WR	--	D7 ~ D2	D0	D1
H	L	L	68 serial 16-bit parallel	/CS	A0	E	R/W	D15 ~ D8	D7 ~ D2	D0	D1
L	H	H	68 serial 8-bit parallel	/CS	A0	E	R/W	--	D7 ~ D2	D0	D1
L	L	L	8-bit SPI mode (4 line)	/CS	SCL	--	--	--	--	SI	A0
L	L	H	9-bit SPI mode (3 line)	/CS	SCL	--	--	--	--	SI	--

NOTE: When these pins are set to any other combination, A0, E_RD and RW_WR inputs are disabled and D0 to D15 are high impedance.

7.1.2 8-bit or 16-bit Parallel Interface

The ST7625 identifies the type of the data bus signals according to the combination of A0, /RD (E) and /WR (W/R) signals, as shown in Table 7.1.2.

Table 7.1.2 Parallel Data Transfer

Common	6800-series		8080-series		Description
A0	R/W	E	/WR	/RD	
H	H	↑	H	↓	Display data read out
H	H	↑	H	↓	Register status read
L	L	↓	↑	H	Insturction write
H	L	↓	↑	H	Display data write

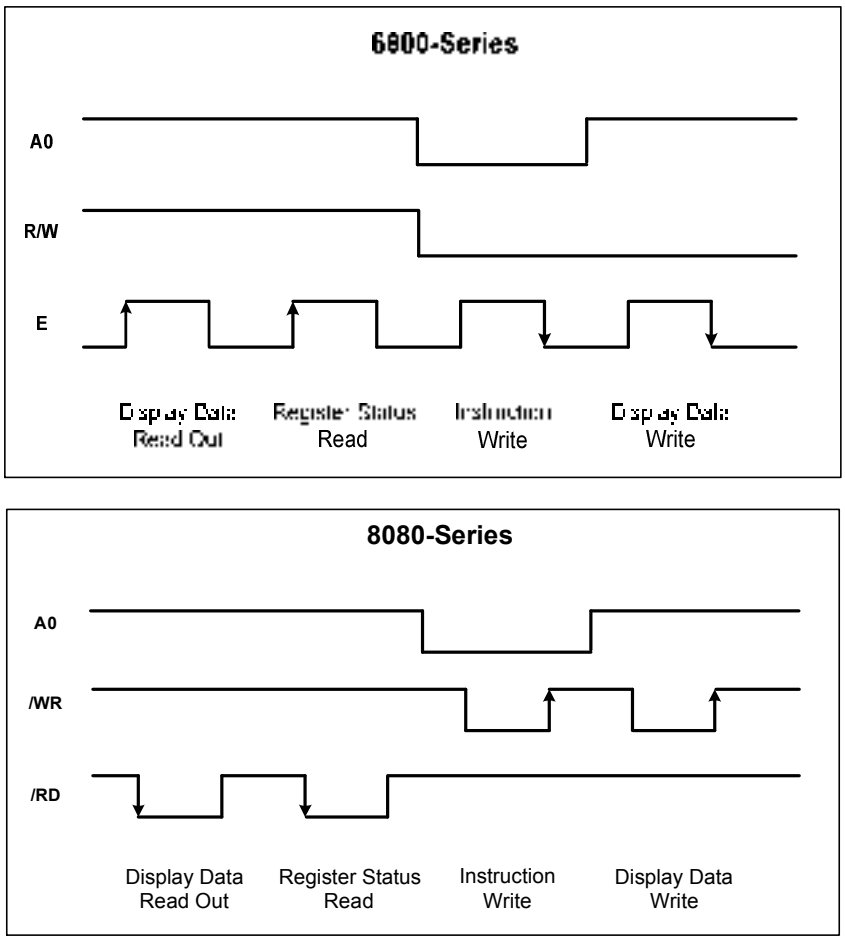

Figure 7.1Parallel Data Transfer Example Chart

Relation between Data Bus and Gradation Data

The interface of ST7625 supports 256 color display,4096 color display, 65K color display, truncated 262K color display, and truncated 16M color display.

When using 256, 4096, 65K, 262K, and 16M color display; you can specify color for each of R, G, B using the palette function.

Use the command for switching between these modes.

(1) 256 color input mode

1. 8-bit interface

D7, D6, D5, D4, D3, D2, D1, D0: RRRGGGBB 1st writes

There is only 1 write operation for 1 pixel data.

The data of a single pixel is written in the display data RAM when the 1st write operation finishes.

2. 16-bit interface

D15, D14, D13, D12, D11, D10, D9, D8, D7, D6, D5, D4, D3, D2, D1, D0: XXXXXXXXRRRGGGBB 1st writes

There is only 1 write operation for 1 pixel data.

The data of a single pixel is written in the display data RAM when the 1st write operation finishes. “X” are ignored dummy bits.

(2) 4096-color display

(1-1) Type A 4096 color display

1. 8-bit interface

D7, D6, D5, D4, D3, D2, D1, D0: RRRRGGGG 1st writes

D7, D6, D5, D4, D3, D2, D1, D0: BBBBRRRR 2nd writes

D7, D6, D5, D4, D3, D2, D1, D0: GGGGBBBB 3rd writes

There are 3 write operations for 2 pixel data.

The data of a single pixel is written in the display data RAM when the 2nd write operation finishes, and the 2nd pixel data is written in the display data RAM when the 3rd write operation finishes.

2. 16-bit interface

D15, D14, D13, D12, D11, D10, D9, D8, D7, D6, D5, D4, D3, D2, D1, D0: RRRRGGGGBBBBXXXX

There is only 1 write operation for 1 pixel data.

The data of a single pixel is written in the display data RAM when the 1st write operation finishes. “X” are ignored dummy bits.

(1-2) Type B 4096 color display

1. 8-bit interface

D7, D6, D5, D4, D3, D2, D1, D0: XXXXRRRR 1st writes

D7, D6, D5, D4, D3, D2, D1, D0: GGGGBBBB 2nd writes

There are 2 write operations for 1 pixel data.

The data of a single pixel is written in the display data RAM when the the 2nd write operation finishes. “X” are ignored dummy bits.

2. 16-bit interface

D15, D14, D13, D12, D11, D10, D9, D8, D7, D6, D5, D4, D3, D2, D1, D0: XXXXRRRRGGGGBBBB

There is only 1 write operation for 1 pixel data.

The data of a single pixel is written in the display data RAM when the 1st write operation finishes. “X” are ignored dummy bits.

(3) 65K color input mode

1. 8-bit interface

D7, D6, D5, D4, D3, D2, D1, D0: RRRRRGGG 1st writes

D7, D6, D5, D4, D3, D2, D1, D0: GGGBBBBB 2nd writes

There are 2 write operations for 1 pixel data.

The data of a single pixel is written in the display data RAM when the 2nd write operation finishes.

2. 16-bit interface

D15, D14, D13, D12, D11, D10, D9, D8, D7, D6, D5, D4, D3, D2, D1, D0: RRRRRGGGGGGBBBBB 1st writes

There is only 1 write operation for 1 pixel data.

The data of a single pixel is written in the display data RAM when the 1st write operation finishes.

(4) Truncated 262K color input mode

1. 8-bit interface

D7, D6, D5, D4, D3, D2, D1, D0: RRRRRRXX 1st writes

D7, D6, D5, D4, D3, D2, D1, D0: GGGGGGXX 2nd writes

D7, D6, D5, D4, D3, D2, D1, D0: BBBBBBXX 3rd writes

The data of a single pixel is read after the third write operation as shown, and it is written in the display RAM.

"X" is dummy bit, and it is ignored for display.

2. 16-bit interface

D15, D14, D13, D12, D11, D10, D9, D8, D7, D6, D5, D4, D3, D2, D1, D0: RRRRRRXXGGGGGGXX 1st writes

D15, D14, D13, D12, D11, D10, D9, D8, D7, D6, D5, D4, D3, D2, D1, D0: BBBBBBXXXXXXXXXXXX 2nd writes

The data of a single pixel is read after the second write operation as shown, and it is written in the display RAM.

(5) Truncated 16M color input mode

1. 8-bit interface

D7, D6, D5, D4, D3, D2, D1, D0: RRRRRRRR 1st writes

D7, D6, D5, D4, D3, D2, D1, D0: GGGGGGGG 2nd writes

D7, D6, D5, D4, D3, D2, D1, D0: BBBBBBBB 3rd writes

The data of a single pixel is read after the third write operation as shown, and it is written in the display RAM.

2. 16-bit interface

D15, D14, D13, D12, D11, D10, D9, D8, D7, D6, D5, D4, D3, D2, D1, D0: RRRRRRRRGGGGGGGG 1st writes

D15, D14, D13, D12, D11, D10, D9, D8, D7, D6, D5, D4, D3, D2, D1, D0: BBBBBBBBXXXXXXXX 2nd writes

The data of a single pixel is read after the second write operation as shown, and it is written in the display RAM.

7.1.3 8-bit and 9-bit Serial Interface

The 8-bit serial interface uses four pins /CS, SI, SCL, and A0 to enter commands and data. Meanwhile, the 9-bit serial interface uses three pins /CS, SI and SCL for the same purpose.

Data read is not available in the serial interface. Data entered must be 8 bits for each time.

The relation between gray-scale data and data bus in the serial input is the same as that in the 8-bit parallel interface mode at every gradation.

(1) 8-bit serial interface (4-line)

When entering data (parameters): A0= HIGH at the rising edge of the 8th SCL.

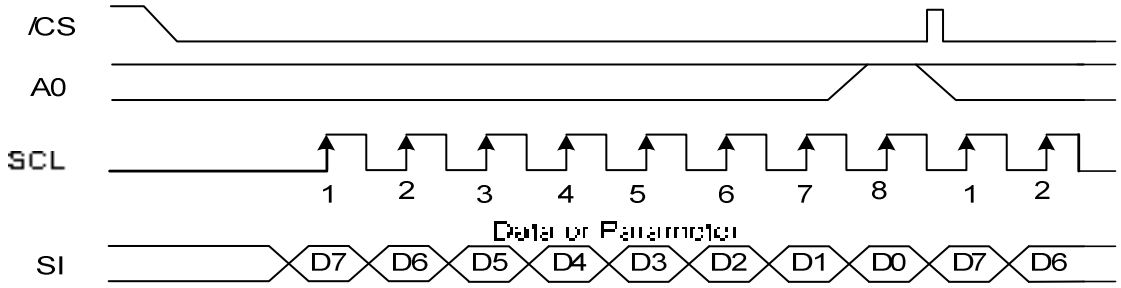

When entering command: A0= LOW at the rising edge of the 8th SCL

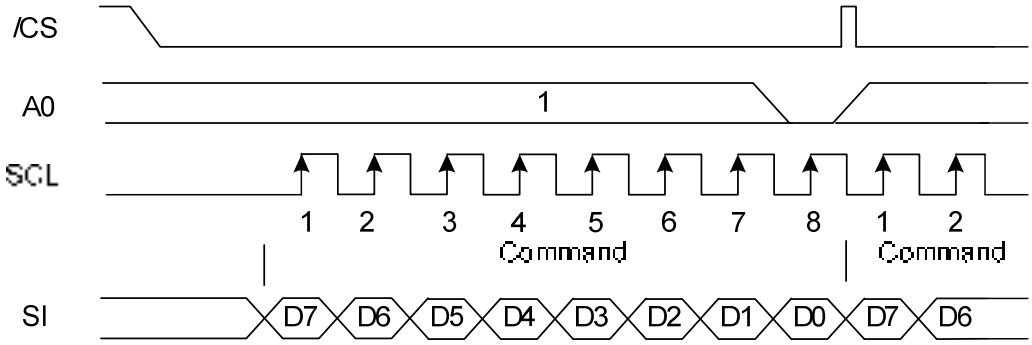

When entering reading command:

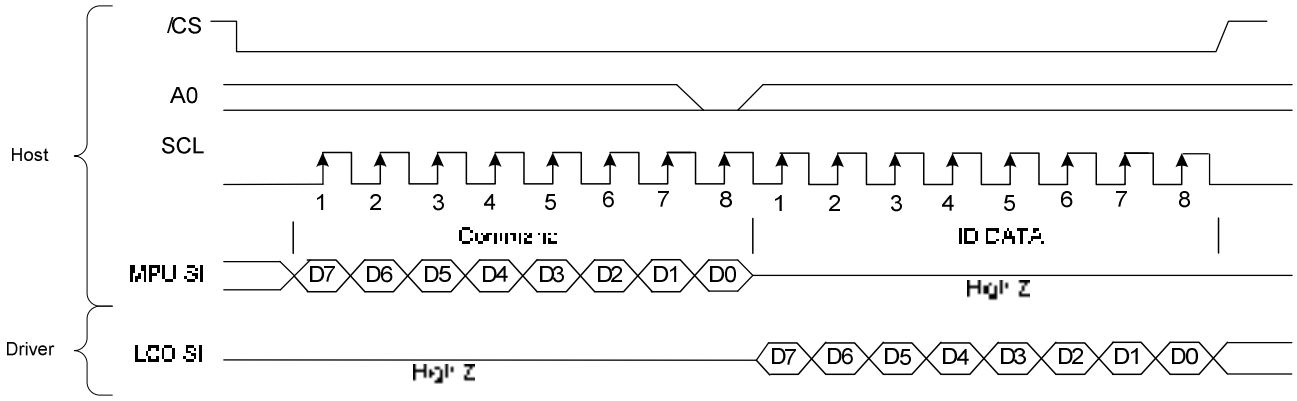

(2) 9-bit serial interface (3-line)

When entering data (parameters): SI= HIGH at the rising edge of the 1st SCL.

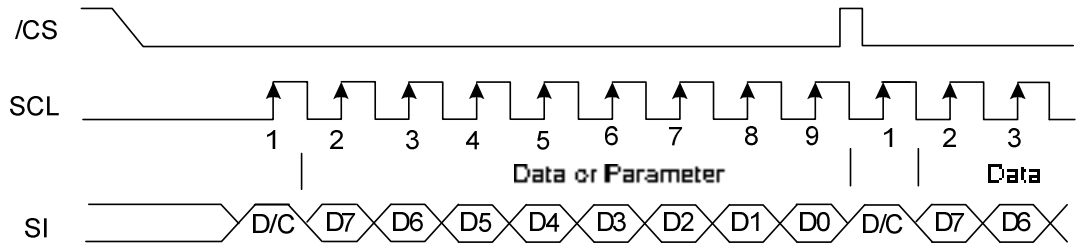

When entering command: SI= LOW at the rising edge of the 1st SCL.

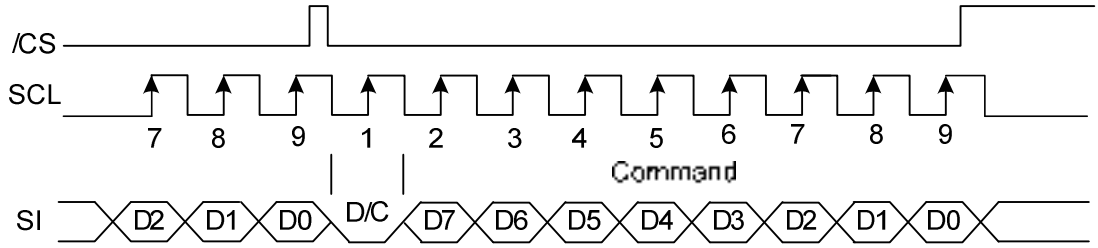

When entering reading command:

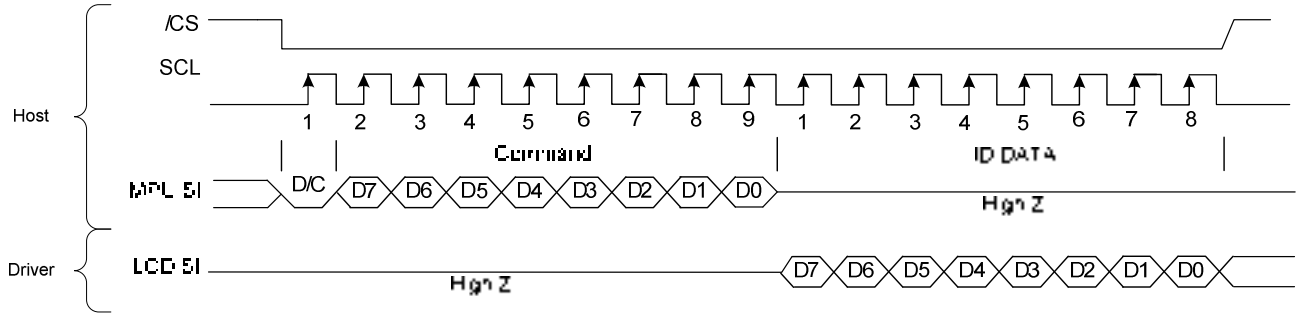

- If /CS is set to HIGH while the 8 bits from D7 to D0 are entered, the data concerned is invalidate. Before entering succeeding sets of data, you must correctly input the data concerned again.
- In order to avoid data transfer error due to incoming noise, it is recommended to set /CS at HIGH on byte basis to initialize the serial-to-parallel conversion counter and the register
- When executing the command RAMWR, set /CS to HIGH after writing the last address. The internal shift register and the counter will reset when /CS =H.

7.1.4 8-bit and 9-bit Serial Interface Data Color Coding

8-bit serial interface (4-line)

(1) R 3-bit, G 3-bit, B 2-bit, 256 colors

There is 1 pixel (= 3 sub-pixels) per byte.

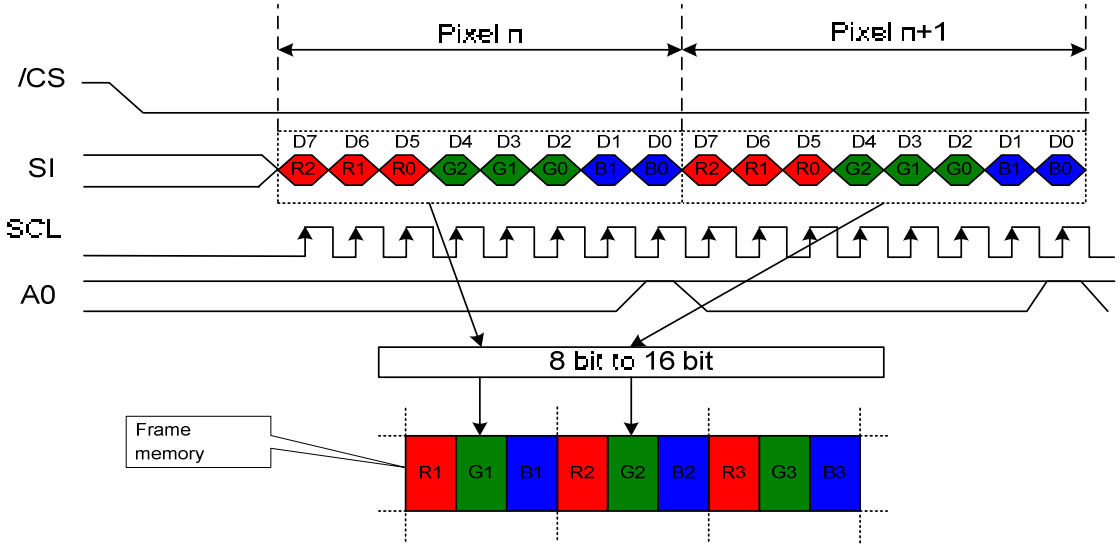

Note: R2, G2, B1 are the most significant bits and R0, G0, B0 are the least significant bits.

(2) R 4-bit, G 4-bit, B 4-bit, 4,096 colors – Type A

There are 2 pixel (= 3 sub-pixels) per 3 byte.

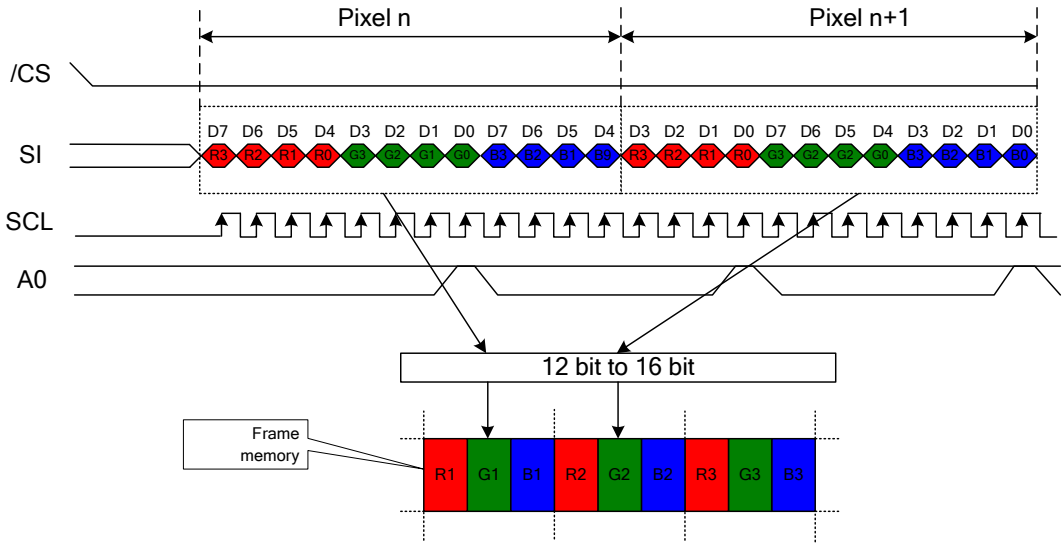

Note: R3, G3, B3 are the most significant bits and R0, G0, B0 are the least significant bits.

(3) R 4-bit, G 4-bit, B 4-bit, 4,096 colors – Type B

There is 1 pixel (= 3 sub-pixels) per 2 bytes.

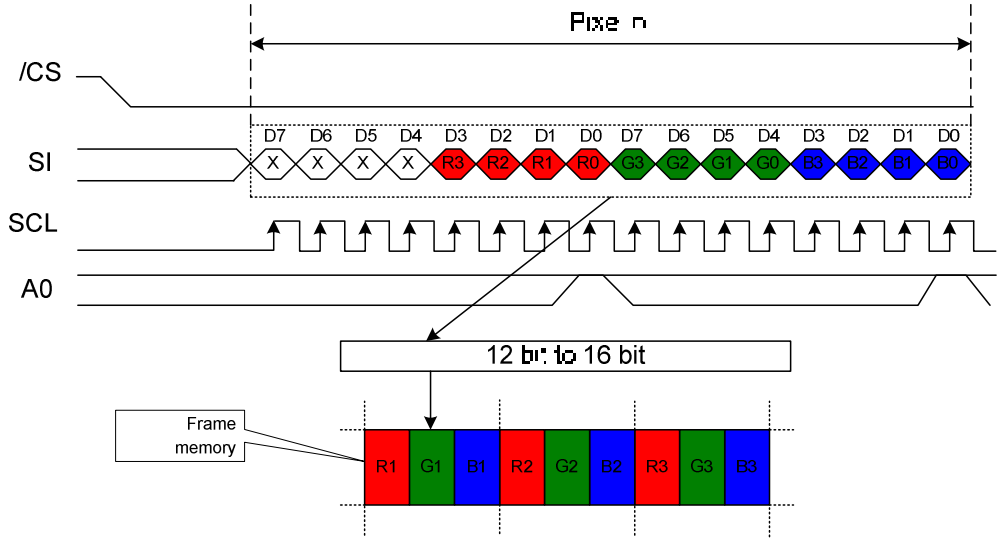

Note: R3, G3, B3 are the most significant bits and R0, G0, B0 are the least significant bits.

(4) R 5-bit, G 6-bit, B 5-bit, 65,536 colors

There is 1 pixel (= 3 sub-pixels) per 2 byte

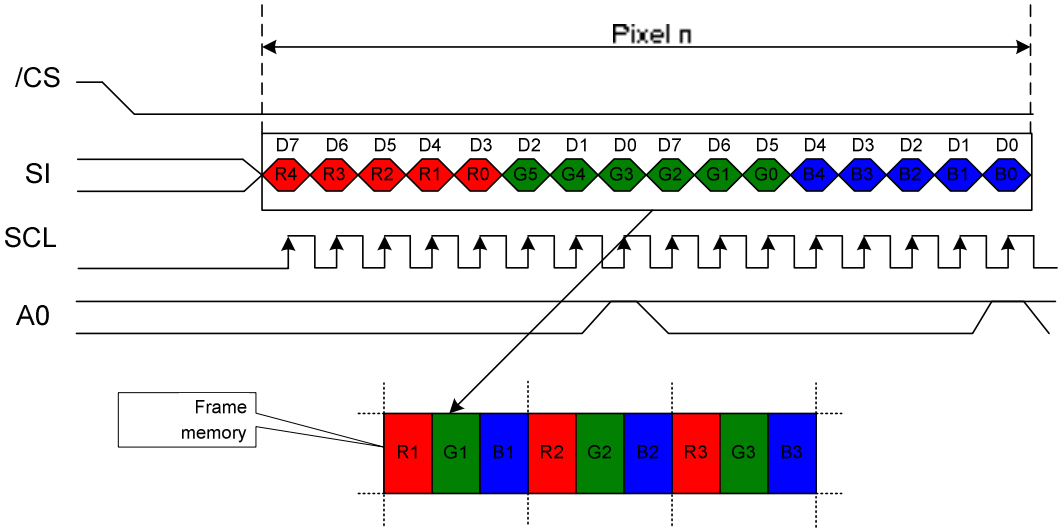

Note: R4, G5, B4 are the most significant bits and R0, G0, B0 are the least significant bits

(5) R 6-bit, G 6-bit, B 6-bit, 262k colors

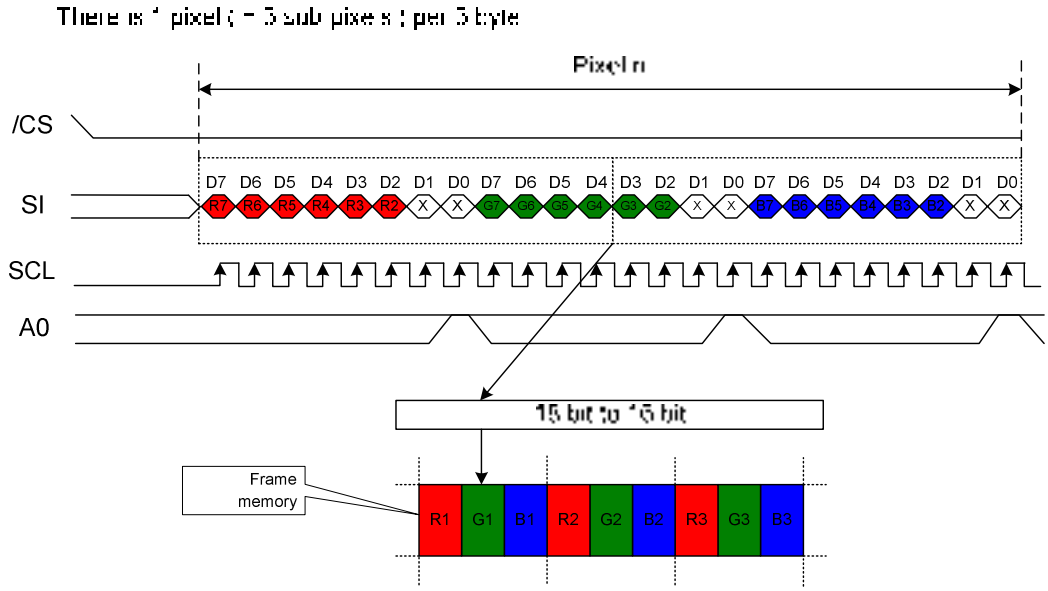

Note: R7, G7, B7 are the most significant bits and R2, G2, B2 are the least significant bits.

(6) R 8-bit, G 8-bit, B 8-bit, 16M colors

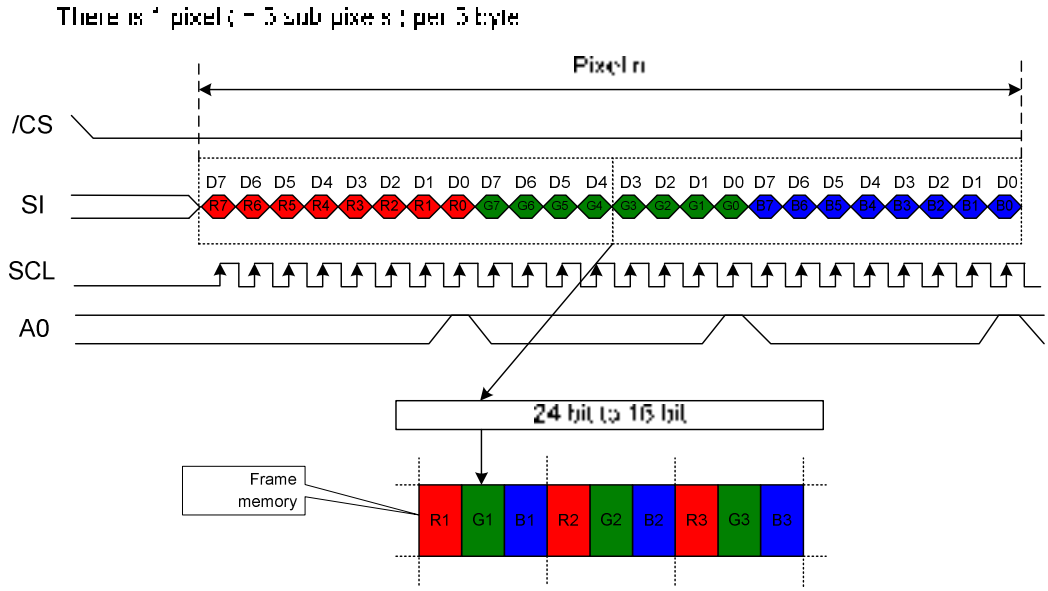

Note: R7, G7, B7 are the most significant bits and R0, G0, B0 are the least significant bits.

9-bit serial interface (3-line)

(1) R 3-bit, G 3-bit, B 2-bit, 256 colors

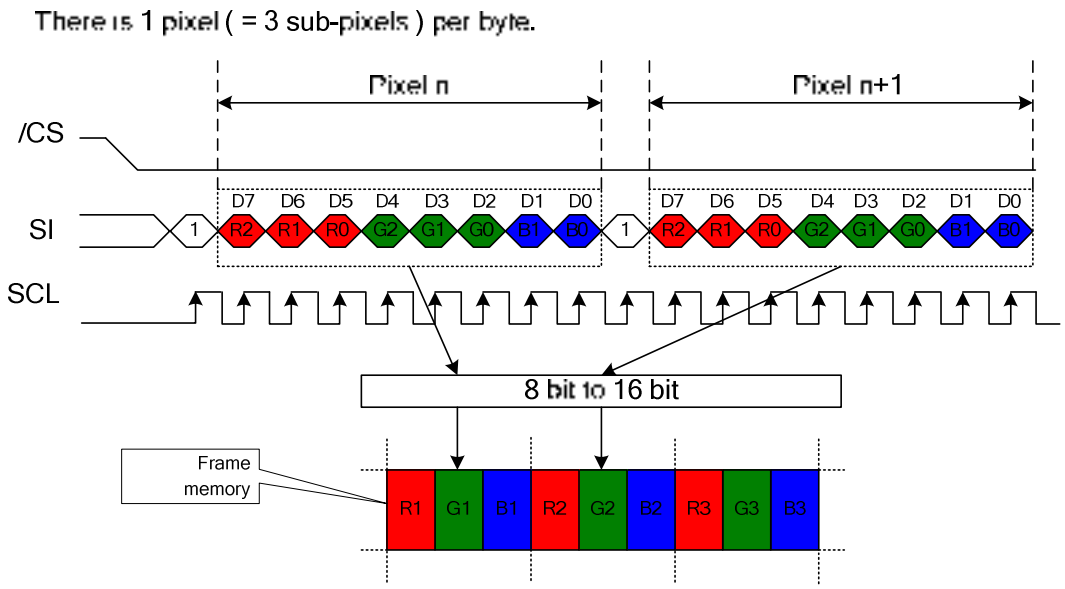

Note: R2, G2, B1 are the most significant bits and R0, G0, B0 are the least significant bits.

(2) R 4-bit, G 4-bit, B 4-bit, 4,096 colors – Type A

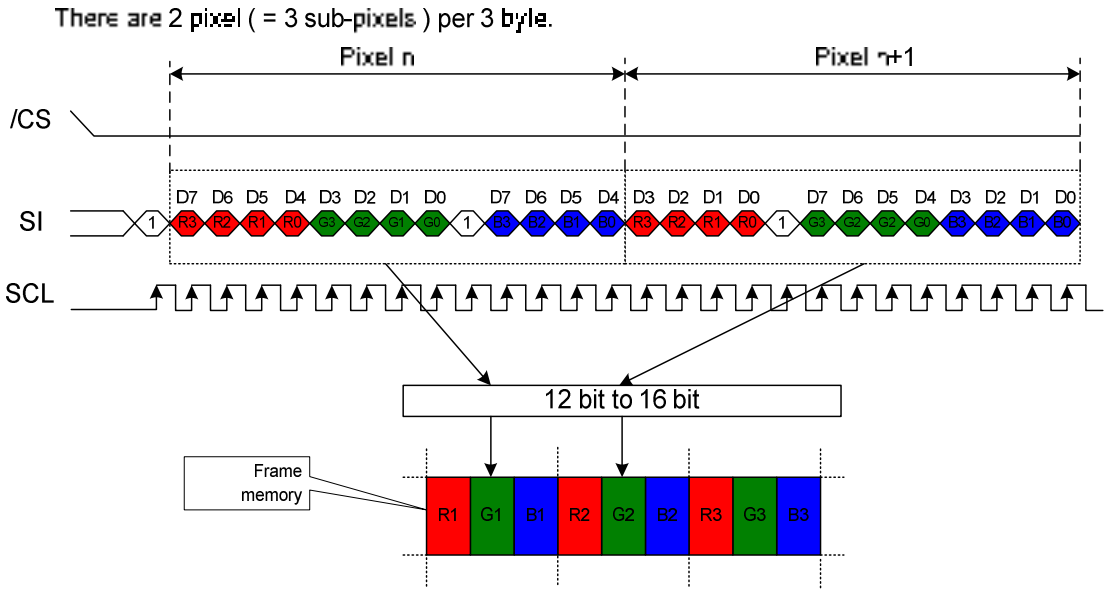

Note: R3, G3, B3 are the most significant bits and R0, G0, B0 are the least significant bits.

(3) R 4-bit, G 4-bit, B 4-bit, 4,096 colors – Type B

There is 1 pixel (= 3 sub-pixels) per 2 bytes.

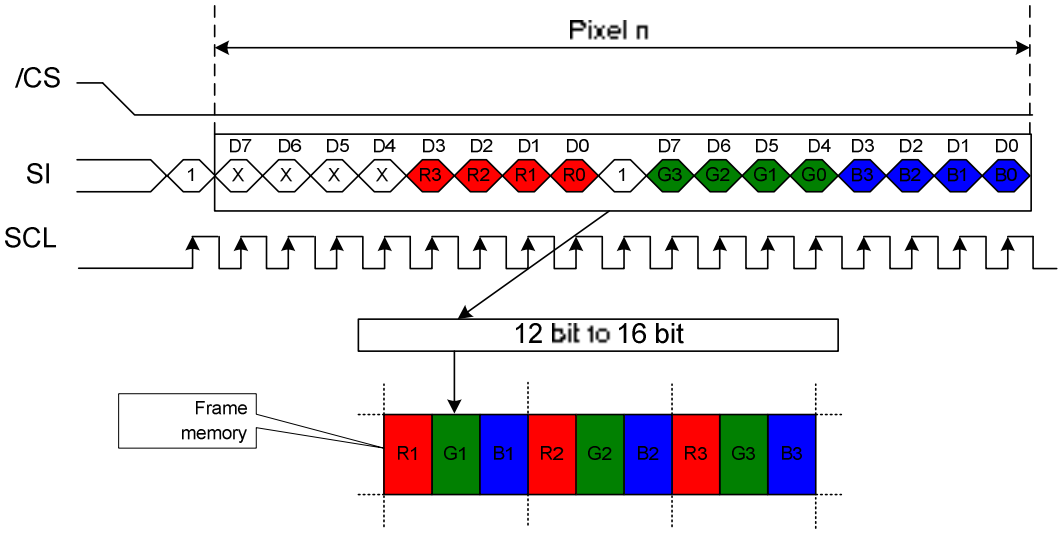

Note: R3, G3, B3 are the most significant bits and R0, G0, B0 are the least significant bits.

(4) R 5-bit, G 6-bit, B 5-bit, 65,536 colors

There is 1 pixel (= 3 sub-pixels) per 2 byte

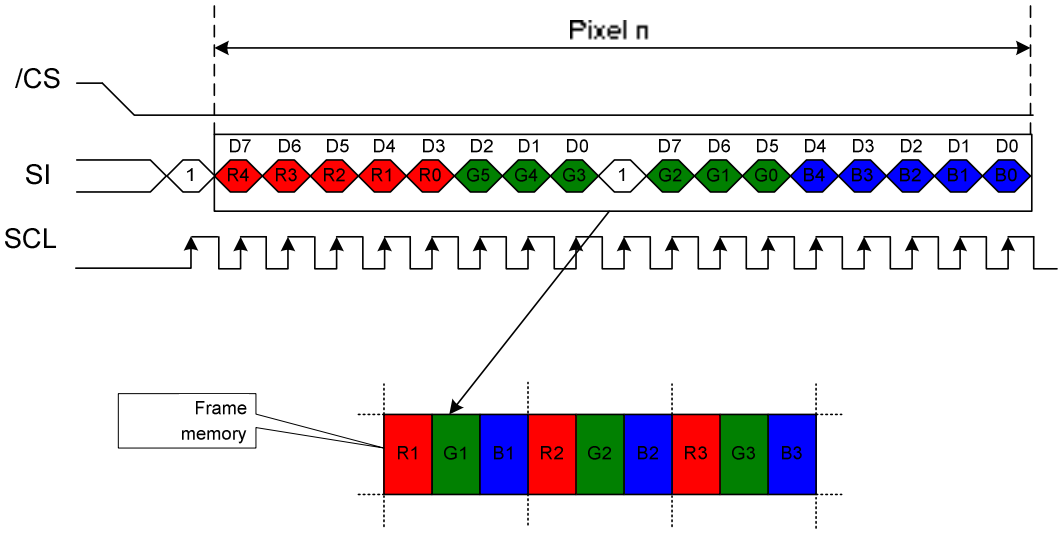

Note: R4, G5, B4 are the most significant bits and R0, G0, B0 are the least significant bits

(5) R 6-bit, G 6-bit, B 6-bit, 262k colors

There is 1 pixel (= 3 sub-pixels) per 3 byte.

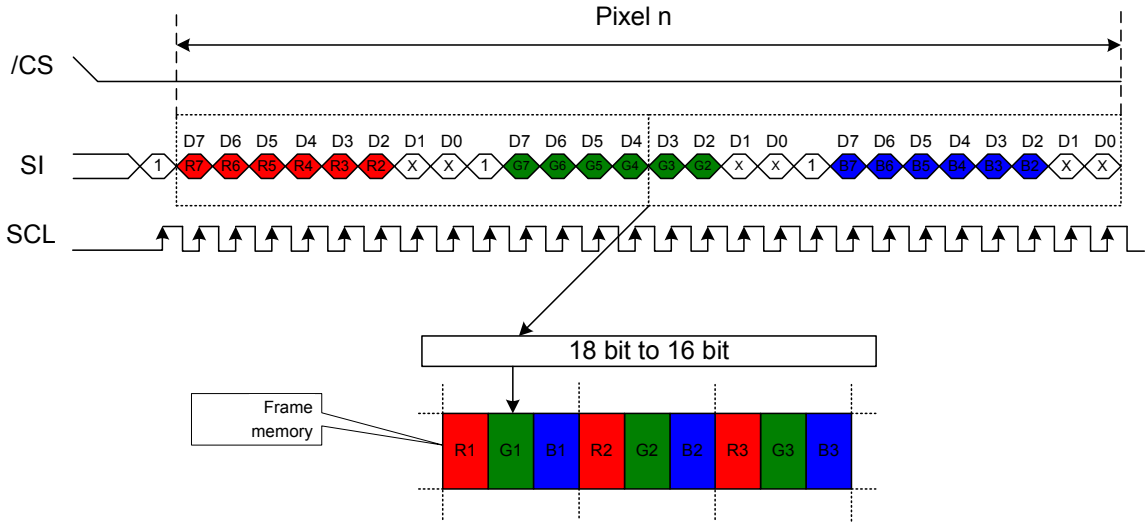

Note: R7, G7, B7 are the most significant bits and R2, G2, B2 are the least significant bits.

(6) R 8-bit, G 8-bit, B 8-bit, 16M colors

There is 1 pixel (= 3 sub-pixels) per 3 byte.

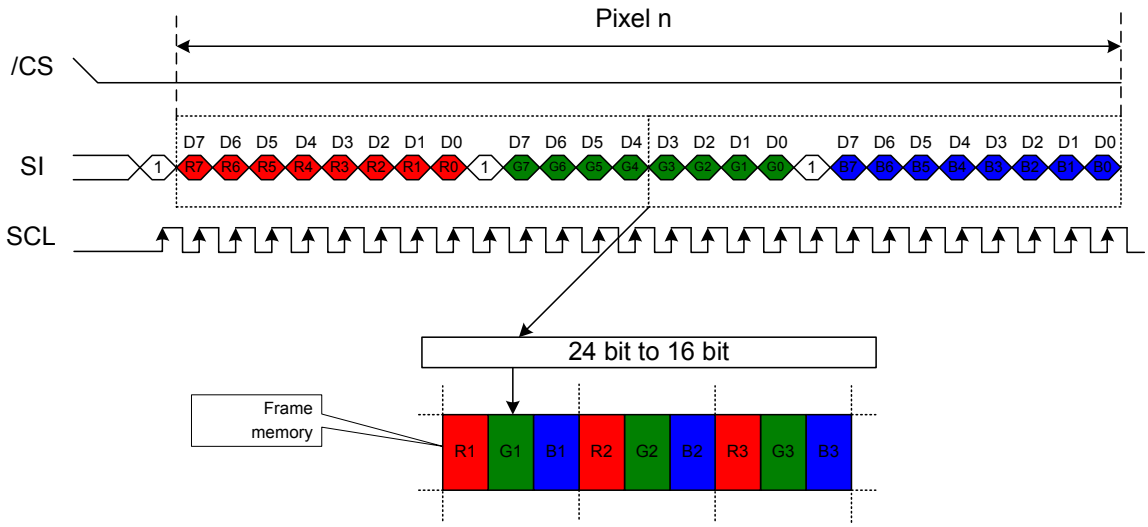

Note: R7, G7, B7 are the most significant bits and R0, G0, B0 are the least significant bits.

7.2 ACCESS TO DDRAM AND INTERNAL REGISTERS

ST7625 realizes high-speed data transfer because the access from MPU is a sort of pipeline processing done via the bus holder attached to the internal, requiring the cycle time alone without needing the wait time.

For example, when MPU writes data to the DDRAM, the data is once held by the bus holder and then written to the DDRAM before the succeeding write cycle is started. When MPU reads data from the DDRAM, the first read cycle is dummy and the bus holder holds the data read in the dummy cycle, and then it read from the bus holder to the system bus in the succeeding read cycle. Figure 7.2 illustrates these relations.

In 80-series interface mode:

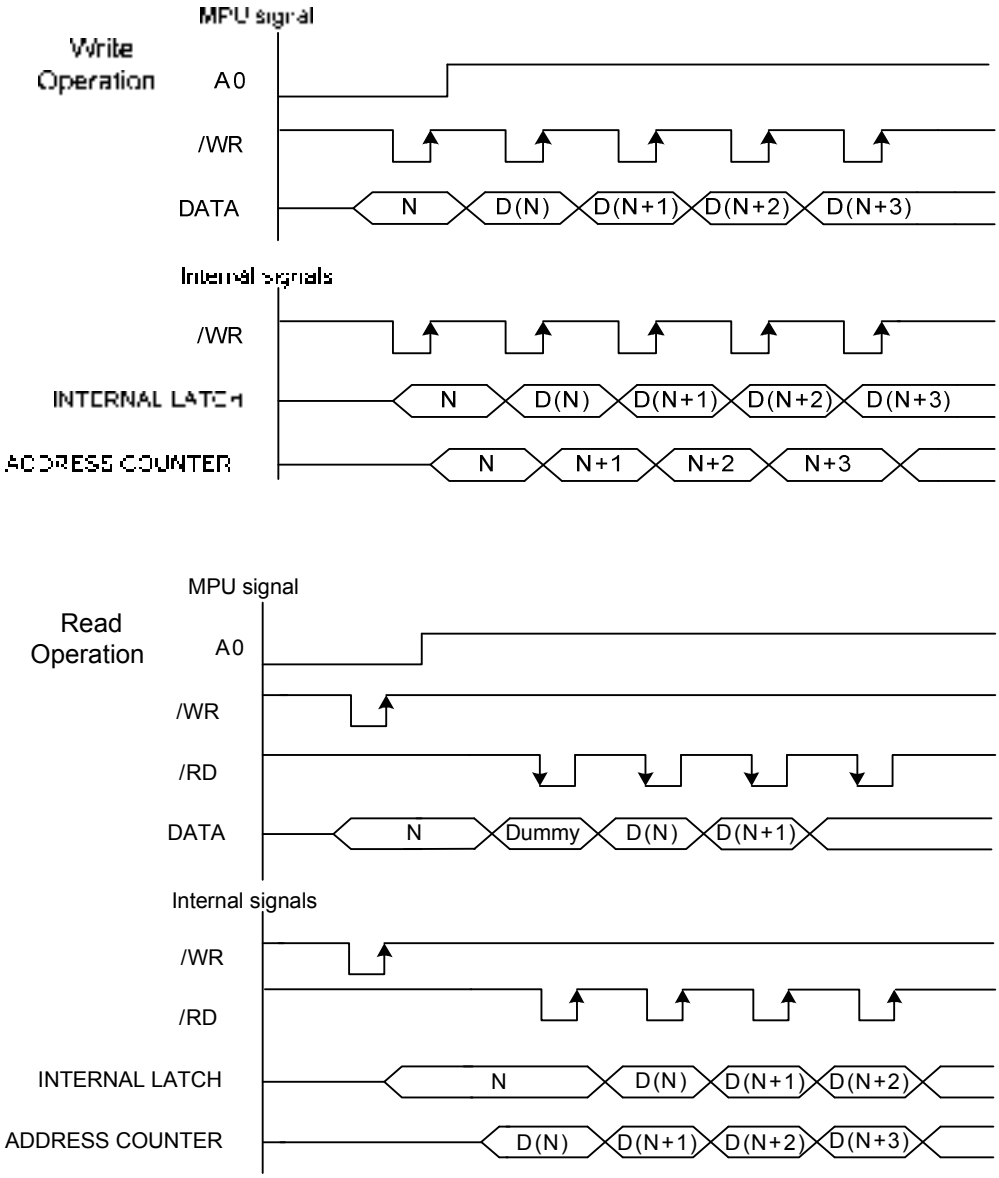

Figure 7.2

7.3 DISPLAY DATA RAM (DDRAM)

7.3.1 DDRAM

It is 102 X 96 X 16 bits capacity RAM prepared for storing dot data. Refer to the following memory map for the RAM configuration.

Memory Map

RGB alignment													
Data control command			**Column**										
	(MADCTR) MX=0		**0**			**1**				**101**			
	(MADCTR) MX=1		**101**			**100**				**0**			
	Color		**R**	**G**	**B**	**R**	**G**	**B**		**R**	**G**	**B**
	Page \ **Data**											
	(MADCTR) MY=0	**(MADCTR) MY=1**										
	0	**95**										
	1	**94**										
	2	**93**										
	3	**92**										
	4	**91**										
	5	**90**										
	6	**89**										
	7	**88**										
	:	**:**										
	88	**7**										
	89	**6**										
	90	**5**										
	91	**4**										
	92	**3**										
	93	**2**										
	94	**1**										
	95	**0**										
SEGout			**0**	**1**	**2**	**3**	**4**	**5**		**303**	**304**	**305**

You can change position of R and B with MADCTR command.

7.3.2 Address Counter

The address counter sets the addresses of the display data RAM for writing.

Data is written pixel into the RAM matrix of ST7625. The data for one pixel or two pixels is collected (RGB 5-6-5-bit), according to the data formats. As soon as this pixel-data information is complete, the “Write access” is activated on the RAM. The locations of RAM are addressed by the address pointers. The address ranges are X=0 to X=101 (65hex) and Y=0 to Y=95 (5Fh). Addresses outside these ranges are not allowed.

Before writing to the RAM, a window must be defined into which will be written. The window is programmable via the command registers XS, YS designating the start address and XE, YE designating the end address.

For example the whole display contents will be written, the window is defined by the following values: XS=0 (0h) YS=0 (0h) and XE=101 (65h), YE=95 (5Fh).

In vertical addressing mode (MV=1), the Y-address increments after each byte, after the last Y-address (Y=YE), Y wraps around to YS and X increments to address the next column. In horizontal addressing mode (MV=0), the X-address increments after each byte, after the last X-address (X=XE), X wraps around to XS and Y increments to address the next row. After the every last address (X=XE and Y=YE) the address pointers wrap around to address (X=XS and Y=YS). For flexibility in handling a wide variety of display architectures, the commands “CASET, RASET” and “MADCTR” (see section “9.1.21”), define flags MX and MY, which allows mirroring of the X-address and Y-address. All combinations of flags are allowed. Figure 7.3 show the available combinations of writing to the display RAM. When MX, MY and MV will be changed the data must be rewritten to the display RAM.

For each image condition, the controls for the column and row counters apply as below:

Condition	Column Counter	Row Counter
When RAMWR command is accepted	Return to “Start Column (XS)”	Return to “Start Row (YS)”
Complete Pixel Read / Write action	Increment by 1	No change
The Column counter value is larger than “End Column (XE)”	Return to “Start Column (XS)”	Increment by 1
The Column counter value is larger than “End Column (XE)” and the Row counter value is larger than “End Row (YE)”	Return to “Start Column (XS)”	Return to “Start Row (YS)”

Display Data Direction	MADCTR Parameter			Image in the Host (MPU)	Image in the Driver (DDRAM)
	MV	MX	MY		
Normal	0	0	0	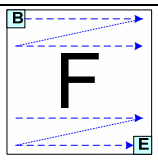	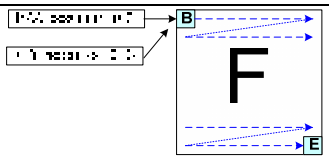
Y-Mirror	0	0	1	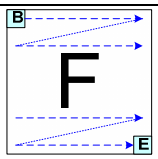	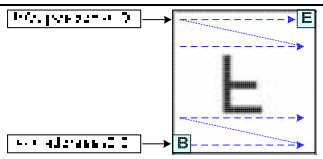
X-Mirror	0	1	0	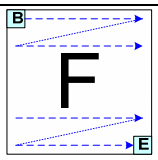	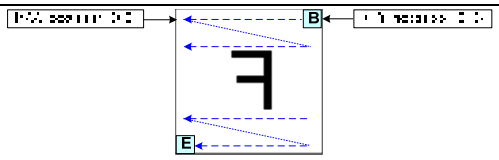
X-Mirror Y-Mirror	0	1	1	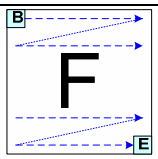	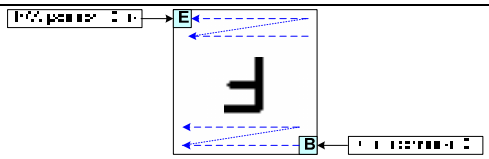
X-Y Exchange	1	0	0	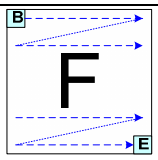	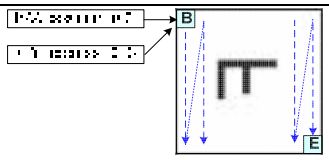
X-Y Exchange Y-Mirror	1	0	1	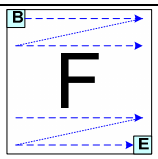	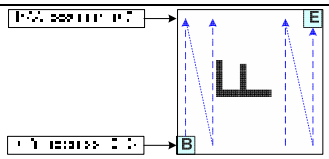
X-Y Exchange X-Mirror	1	1	0	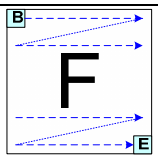	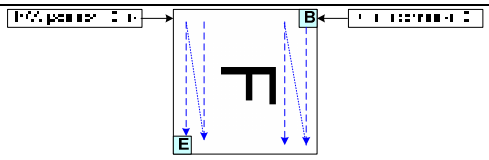
X-Y Exchange X-Mirror Y-Mirror	1	1	1	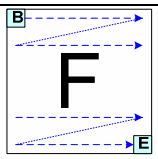	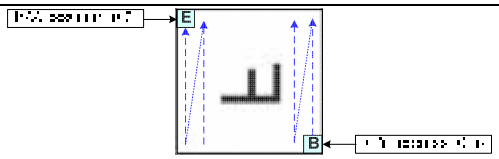

Figure 7.3

Frame Data Write Direction According to the MADCTR parameters (MV, MX and MY)

7.3.3 I/O Buffer Circuit

It is the bi-directional buffer used when MPU reads or writes the DDRAM. Since MPU's read or write of DDRAM is performed independently from data output to the display data latch circuit, asynchronous access to the DDRAM when the LCD is turned on does not cause troubles such as flicking of the display images.

7.3.4 Scroll Address Circuit

The circuit associates lines on DDRAM with COM output. ST7625 processes signals for the liquid crystal display on 1-line basis. Thus, when specifying a specific area in the area scroll display or partial display, you must designate it in line.

7.3.5 Display data Latch Circuit

This circuit is used to temporarily hold display data to be output from the DDRAM to the SEG decoder circuit. Since display normal/inverse and display on/off commands are used to control data in the latch circuit alone, they do not modify data in the DDRAM.

7.3.6 Normal Display On or Partial Mode On, Vertical Scroll Off

In this mode, contents of the frame memory within an area where column address is 00h to 65h and row address is 00h to 5Fh is displayed.

To display a dot on leftmost top corner, store the dot data at (column address, row address) = (0,0).

Example1) Normal Display On

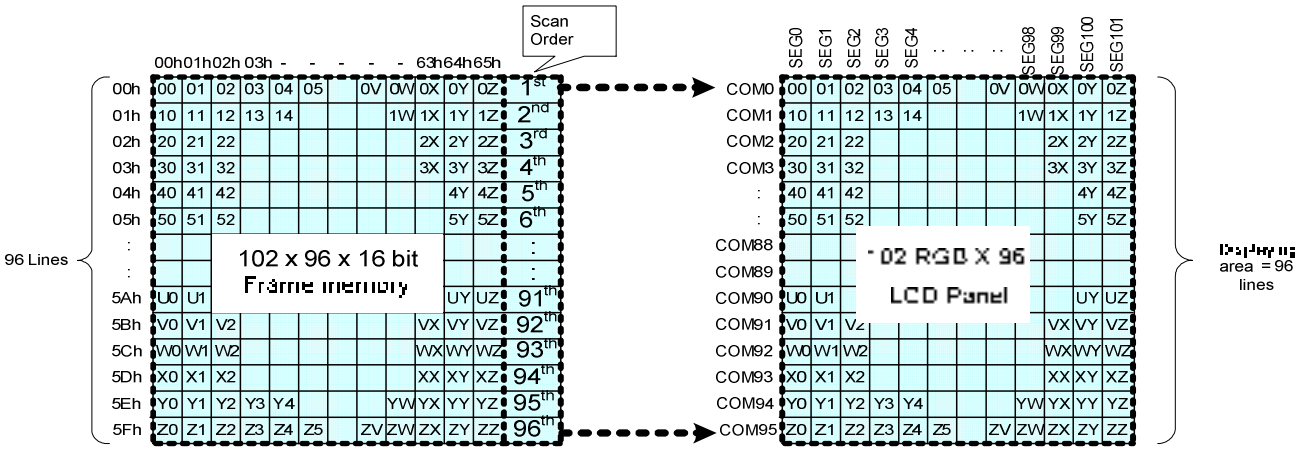

Example2) Partial Display On: PSL[6:0] = 04h, PEL[6:0] = 5Eh, MADCTR (ML)=0

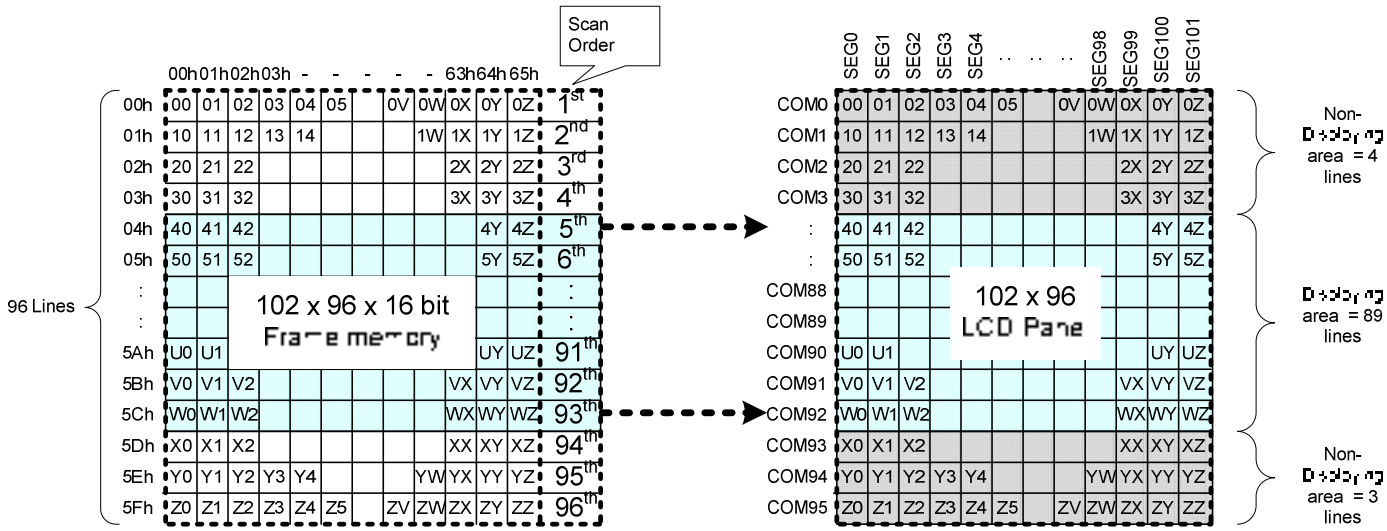

7.3.7 Vertical Scroll

Rolling Scroll

There is just one type of vertical scrolling, which is determined by the commands “Vertical Scrolling Definition” (33h) and “Vertical Scrolling Start Address” (37h).

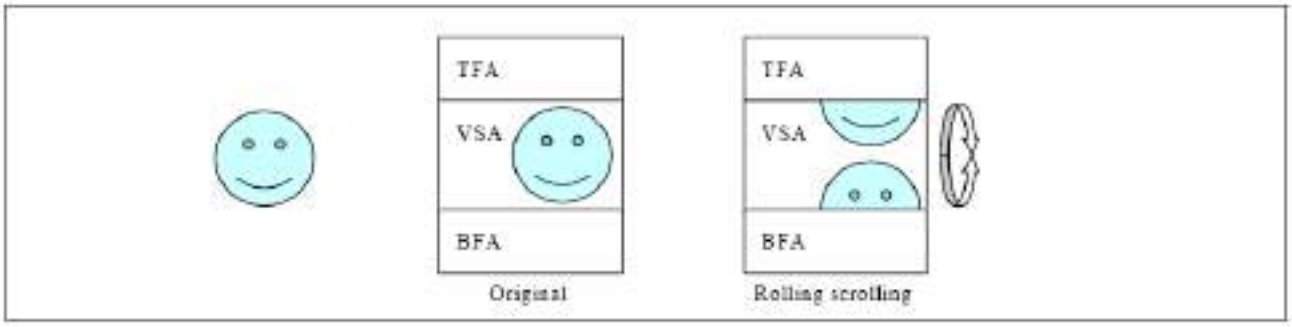

Figure 7.4 Rolling Scroll Definition

When Vertical Scrolling Definition Parameters (TFA+VSA+BFA) =96. In this case, ‘rolling’ scrolling is applied as shown below. All the memory contents will be used.

Example1) Panel size=102 x 96, TFA =3, VSA=91, BFA=2, SSA=4, MADCTR (ML) =0: Rolling Scroll

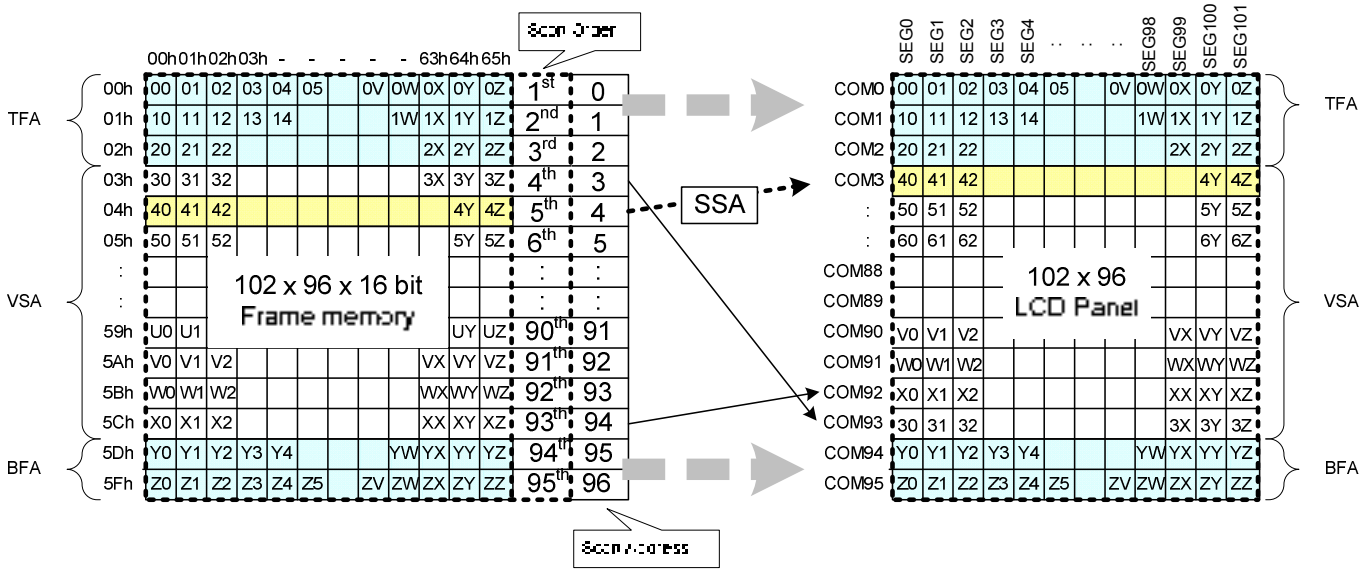

Example2) Panel size=102 x 96, TFA =3, VSA=91, BFA=2, SSA=4, MADCTR (ML) =1: Rolling Scroll

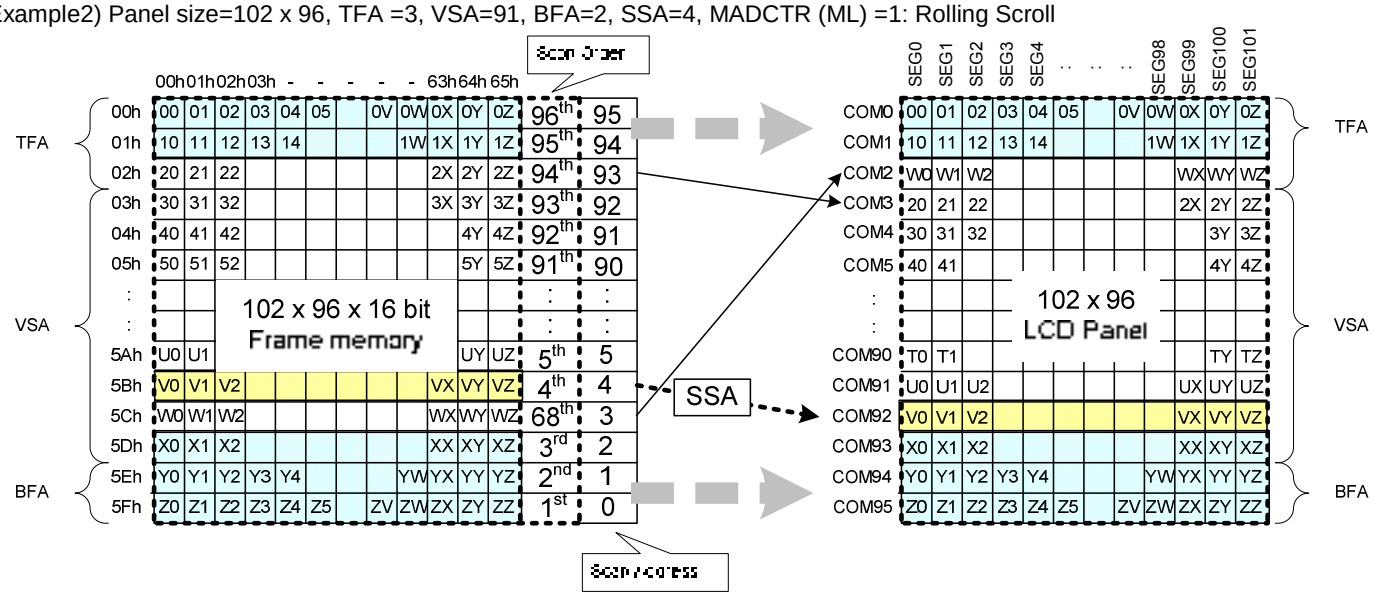

Vertical Scroll Example

There are 2 types of vertical scrolling, which are determined by the commands " Vertical Scrolling Definition" (33h) and "Vertical Scrolling Start Address" (37h).

Case 1: TFA + VSA + BFA<96

N/A. Do not set TFA + VSA + BFA<96. In that case, unexpected picture will be shown.

Case 2: TFA + VSA + BFA=96 (Rolling Scrolling)

Example1) When MADCTR parameter ML="0", TFA=0, VSA=96, BFA=0 and VSCSAD=40.

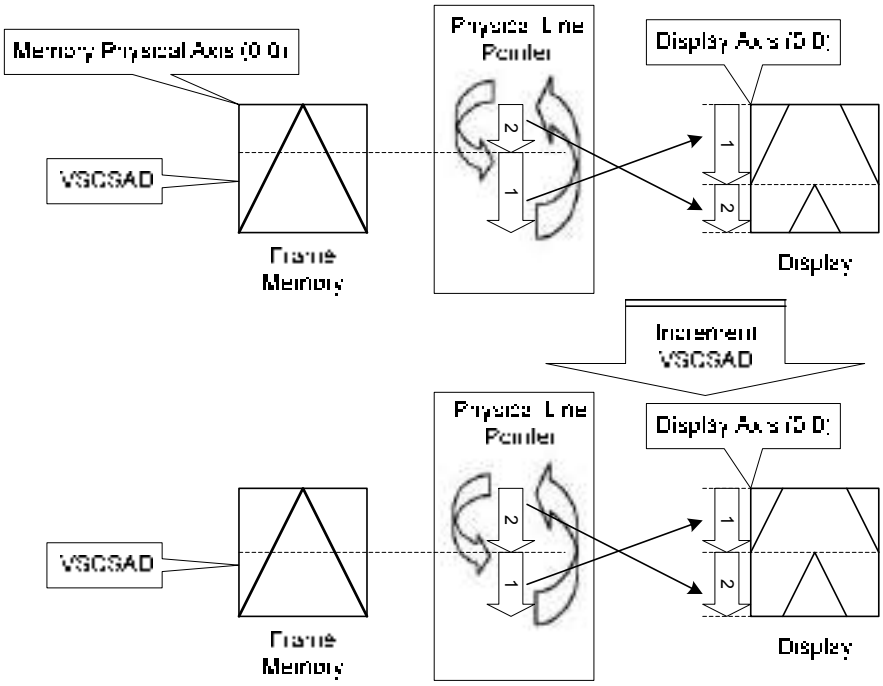

Example2) When MADCTR parameter ML="1", TFA=10, VSA=86, BFA=0 and VSCSAD=30.

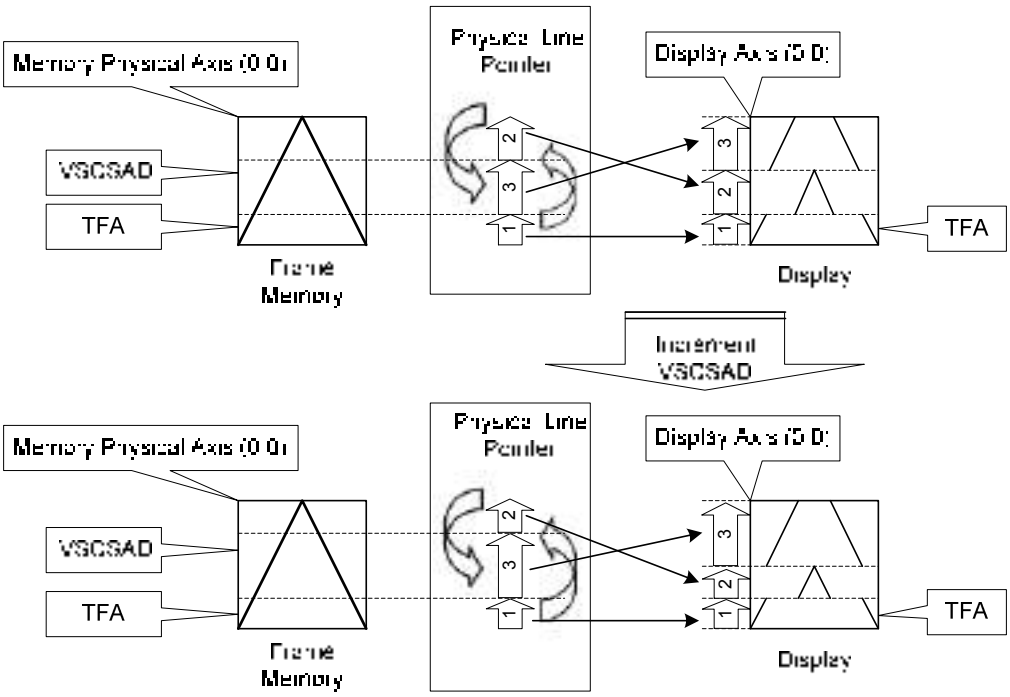

7.4 Gray-Scale Display

ST7625 incorporates a 4FRC & 31 PWM function circuit to display a 64 gray-scale display.

7.5 Oscillation circuit

The on-chip oscillator can operate without using external resistor. When the internal oscillator is used, CLS must be connected to VDD. When the external oscillator is used, CL could be the input pin. This oscillator signal is used in the voltage converter and display timing generation circuit.

7.6 Display Timing Generator Circuit

This circuit generates some signals for displaying LCD. The display clock CL (internal), which is generated by oscillation clock, generates the clock for the line counter and the signal for the display data latch. The line address of on-chip RAM is generated in synchronization with the display clock and the display data latch circuit latches the 96-bits display data in synchronization with the display clock. The display data, which is read to the LCD driver, is completely independent of the access to the display data RAM from the microprocessor. The display clock generates an LCD AC signal (M), which enables the LCD driver to make an AC drive waveform, and also generates an internal common timing signal and start signal to the common driver. The frame signal or the line signal changes the M by setting internal instruction. Driving waveform and internal timing signal are shown in Figure 7.5.

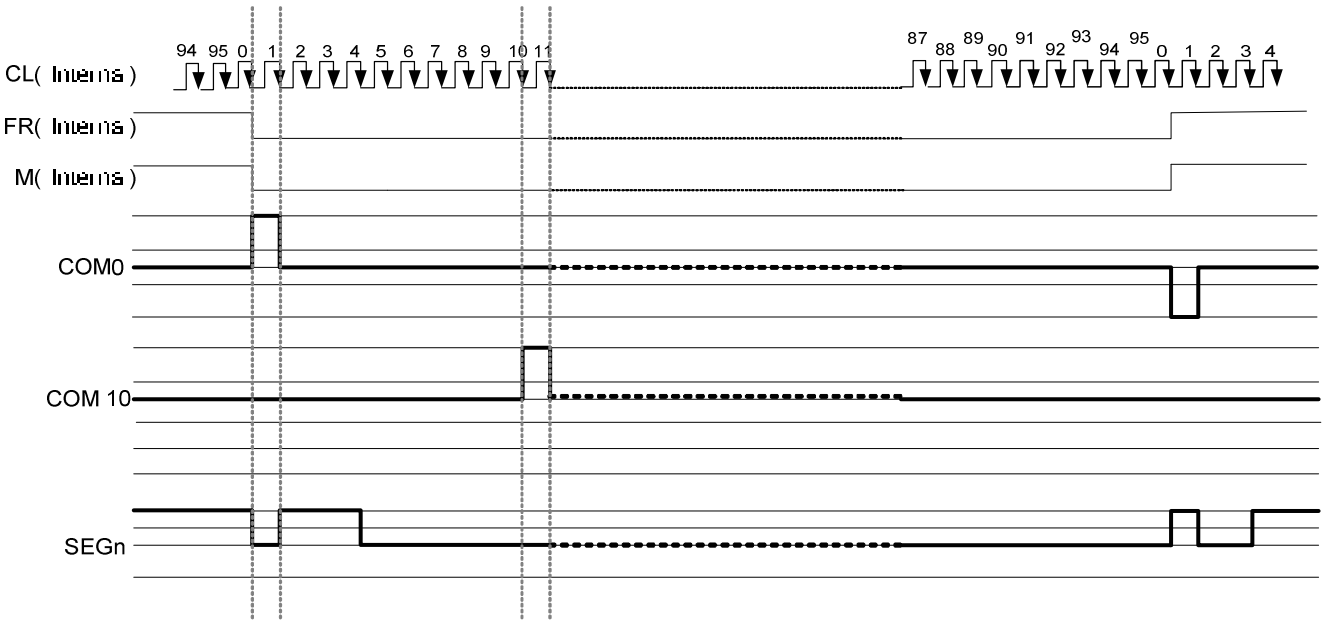

Figure 7.5 2-frame AC Driving Waveform (Duty Ratio: 1/96)

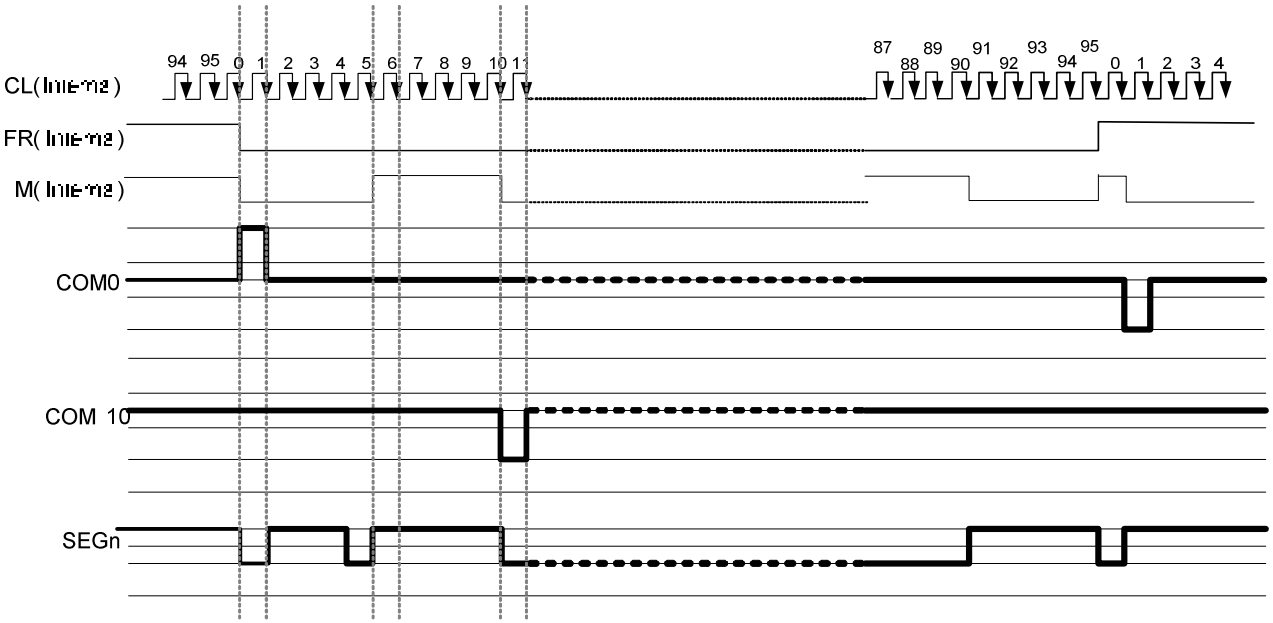

Figure 7.6 N-Line Inversion Driving Waveform (N=10, Duty Ratio=1/96)

7.7 POWER LEVEL DEFINITION

7.7.1 Power ON/OFF SEQUENCE

Definitation: VDDI=VDD & VDD1; VDDA=VDD2, VDD3, VDD4 & VDD5

During power off, if LCD is in the Sleep Out mode, VDDA and VDDI must be powered down minimum 120m sec after /RST has been released.

During power off, if LCD is in the Sleep In mode, VDDI or VDDA can be powered down minimum 0msec after /RST has been released.

/CS can be applied at any timing or can be permanently grounded. /RST has priority over /CS.

If /RST line is not held stable by host during Power On Sequence as defined in Sections case1 and case2, then it will be necessary to apply a Hardware Reset (/RST) after Host Power On Sequence is complete to ensure correct operation. Otherwise function is not guaranteed.

The power on/off sequence is illustrated below:

Case 1 – /RST line is held High or Unstable by Host at Power On

If /RST line is held High or unstable by the host during Power On, then a Hardware Reset must be applied after both VDDA and VDDI have been applied – otherwise correct functionality is not guaranteed. There is no timing restriction upon this hardware reset.

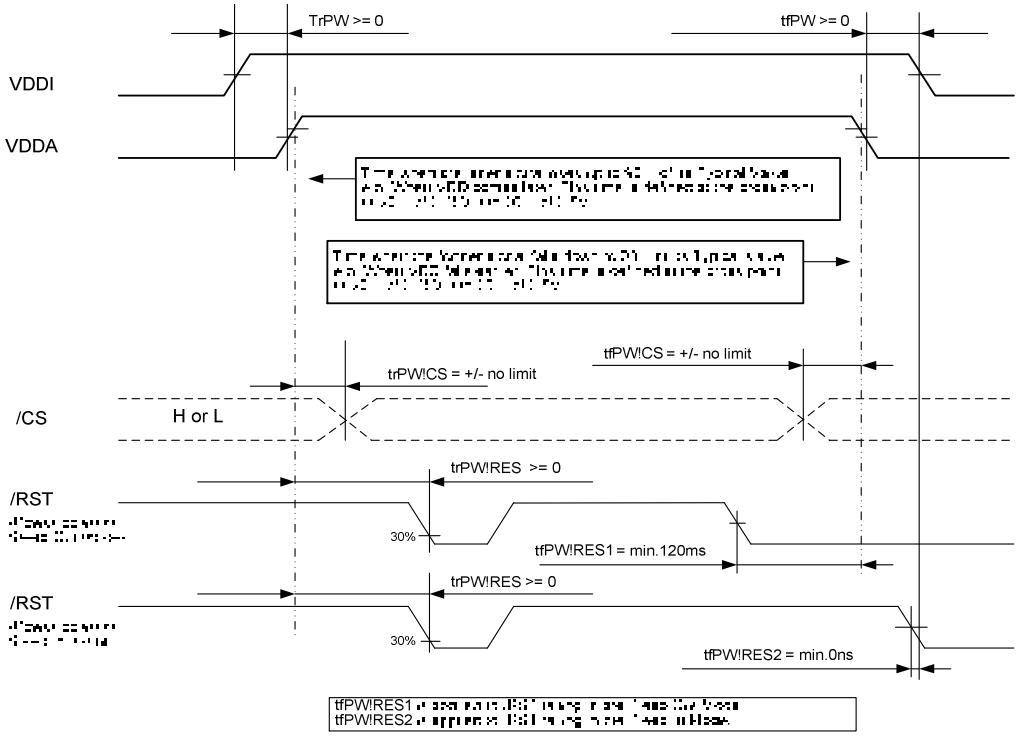

Note: Unless otherwise specified, timings herein show cross point at 50% of signal/power level.

Case 2 – /RST line is held Low by host at Power On

If /RST line is held Low (and stable) by the host during Power On, then the /RST must be held low for minimum 10µsec after both VDDA and VDDI have been applied.

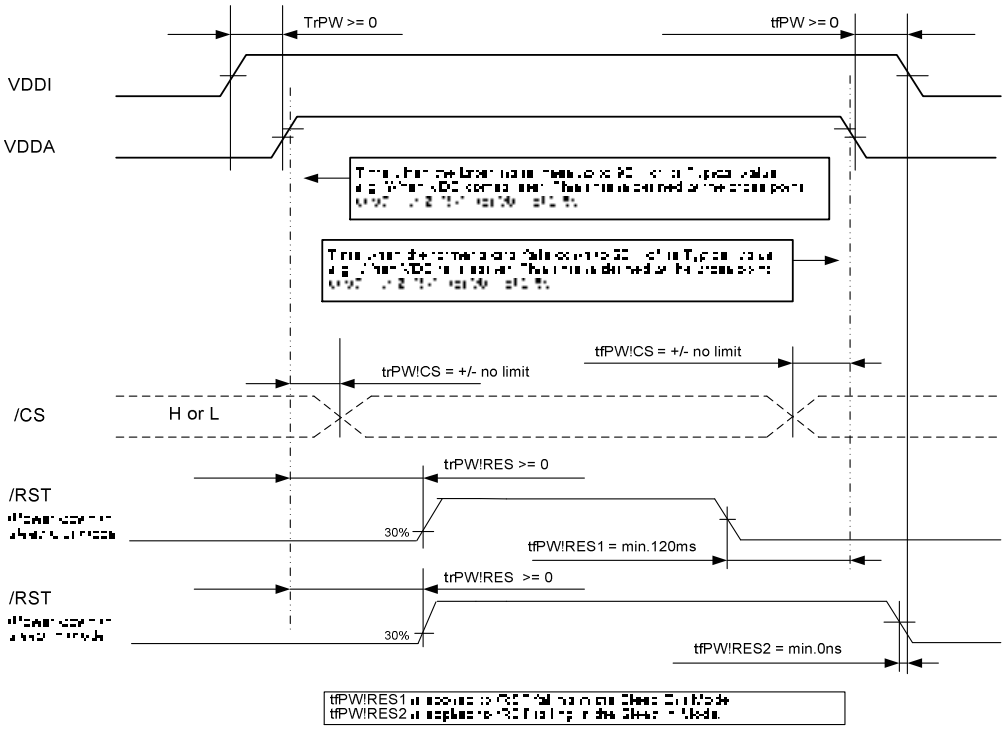

Note: Unless otherwise specified, timings herein show cross point at 50% of signal/power level.

7.7.2 Power Levels

6 level modes are defined they are in order of Maximum Power consumption to Minimum Power Consumption:

1. Normal Mode On (full display), Idle Mode Off, Sleep Out:

In this mode, the display is able to show maximum 65K colors.

2. Partial Mode On, Idle Mode Off, Sleep Out:

In this mode part of the display is used with maximum 65K colors.

3. Normal Mode On (full display), Idle Mode On, Sleep Out:

In this mode, the full display area is used but with 8 colors.

4. Partial Mode On, Idle Mode On, Sleep Out:

In this mode, part of the display is used but with 8 colors.

5. Sleep In Mode:

In this mode, the DC:DC converter, Internal oscillator and panel driver circuit are stopped. Only the MCU interface and memory works with Digital VDD power supply. Contents of the memory are safe.

6. Power Off Mode:

In this mode, both Analog VDD and Digital VDD are removed.

Note: Transition between modes 1-5 is controllable by MCU commands. Mode 6 is entered only when both Power supplies are removed.

7.7.3 POWER FLOW CHART FOR DIFFERENT POWER MODES

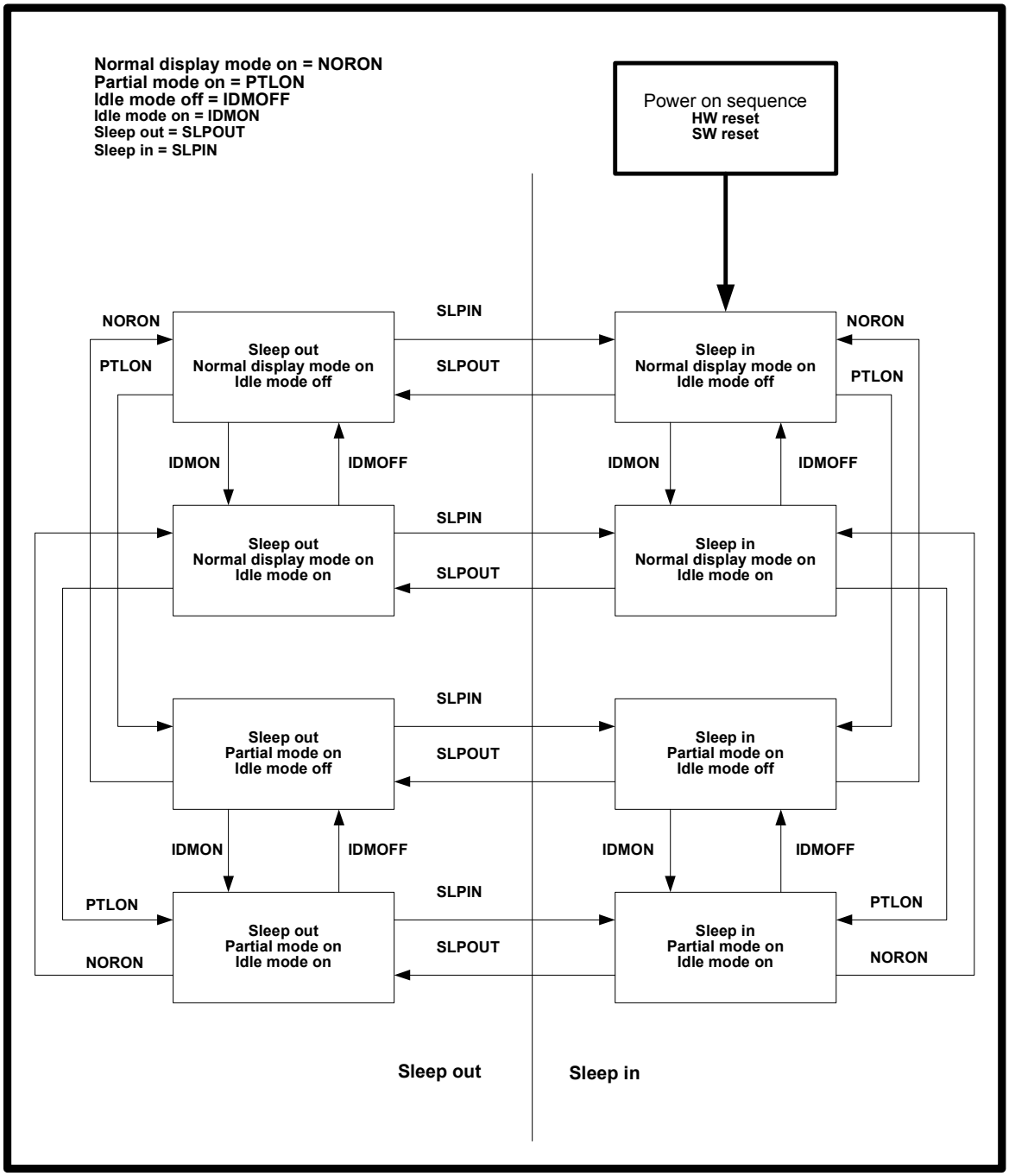

Note

1: There is not any abnormal visual effect when changing from one power mode to another power mode.

7.8 Liquid Crystal Driver Power Circuit

The Power Supply circuits generate the voltage levels necessary to drive liquid crystal driver circuits with low power consumption and the fewest components. There are voltage converter circuits, voltage regulator circuits, and voltage follower circuits. They are controlled by power control instruction.

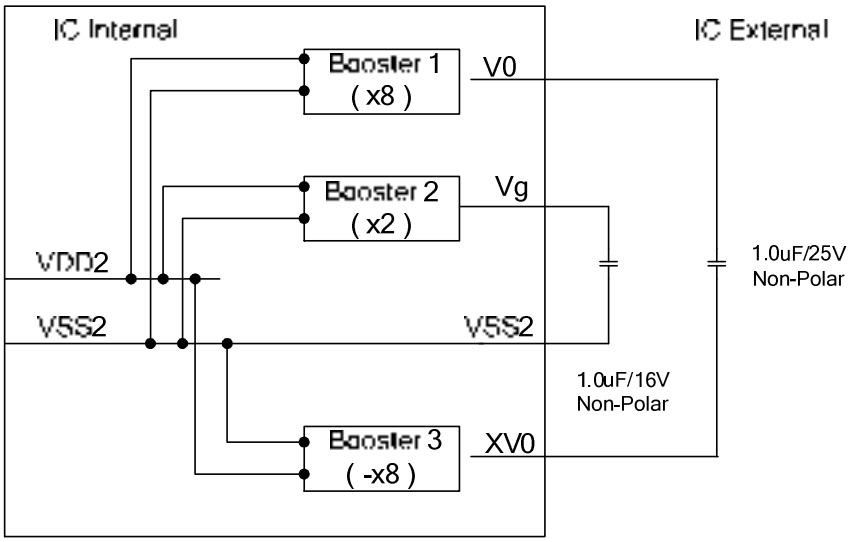

DC/DC Booster Block Diagram

7.8.1 Voltage Regulator Circuits

SET V0 (Temperature = 24℃)

V0=a+{Vop[8:0] + VopOffset[8:0]+ (EV[6:0]-3Fh)}xb (V)

Example:

Vop[8:0]=011010010

VopOffset[8:0]=000000011

EV[6:0]=0111111

V0=3.6 + { 210 + 3 + (63-63) } x 0.04 =12.12 (V)

- a is a fixed constant value (seeTable 7.8.1).
- b is a fixed constant value (seeTable 7.8.1).
- Vop [8:0] is the programmed VOP value. The programming range for Vop[8:0] is 5 to 410 (019Ahex).
- The range of contrast is 128 steps for fine tuning VOP.

Table 7.8.1

SYMBOL	VALUE	UNIT
a	3.6	V
b	0.04	V

The Vop [8:0] value must be in the V0 programming range as given in Figure 7.7. Evaluating V0 equation, values outside the programming range indicated in many result.V0 range is 3.6 ~18.

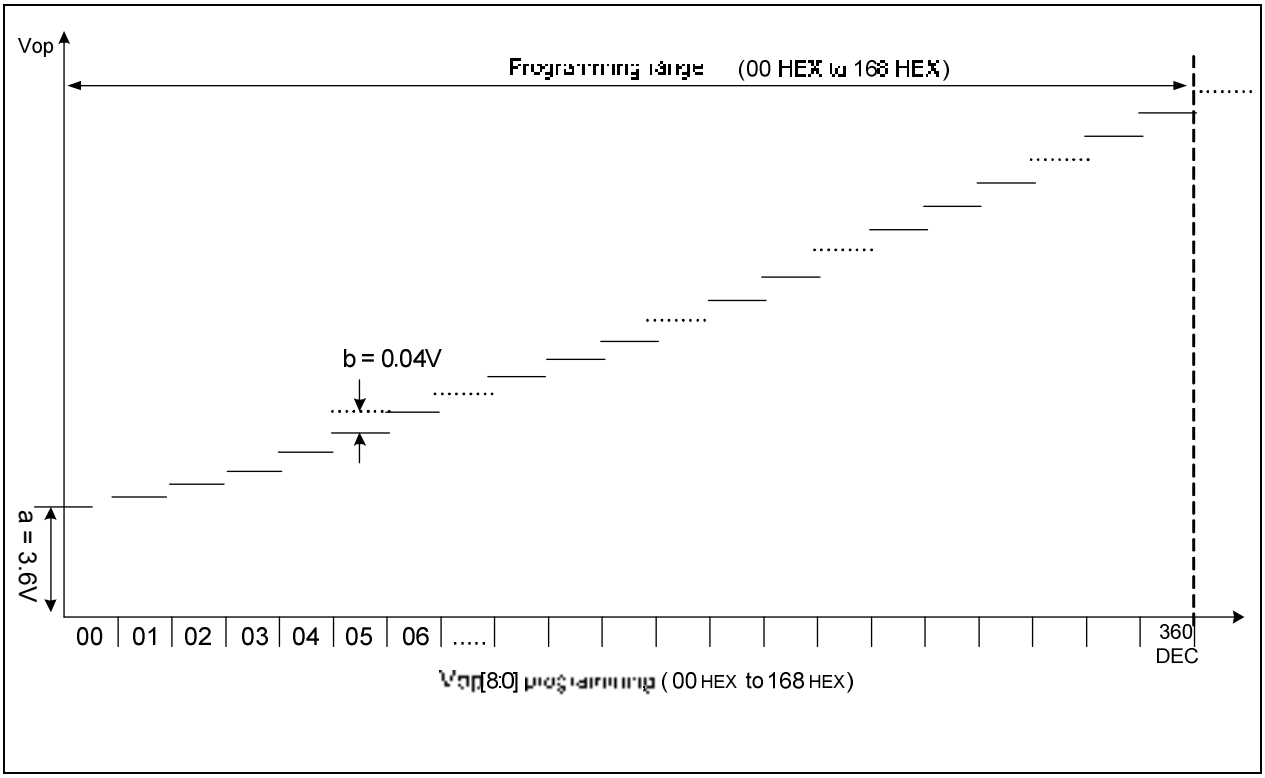

Figure 7.7 V0 programming range

As the programming range for the internally generated V0 voltage is above the limited V0 (18V), users have to ensure while

setting the VPR register and selecting the temperature compensation that under all conditions and including all tolerances that the V0 voltage remains below 18V.

SET V0 with temperature compensation (Temperatue ≠ 24℃)

There are 16-line slope in each temperature steps and customer can select one line slope of temperature compensation coefficient for each temperature step. Each temperature step is 8°C. Please see Figure 7.8 as below.

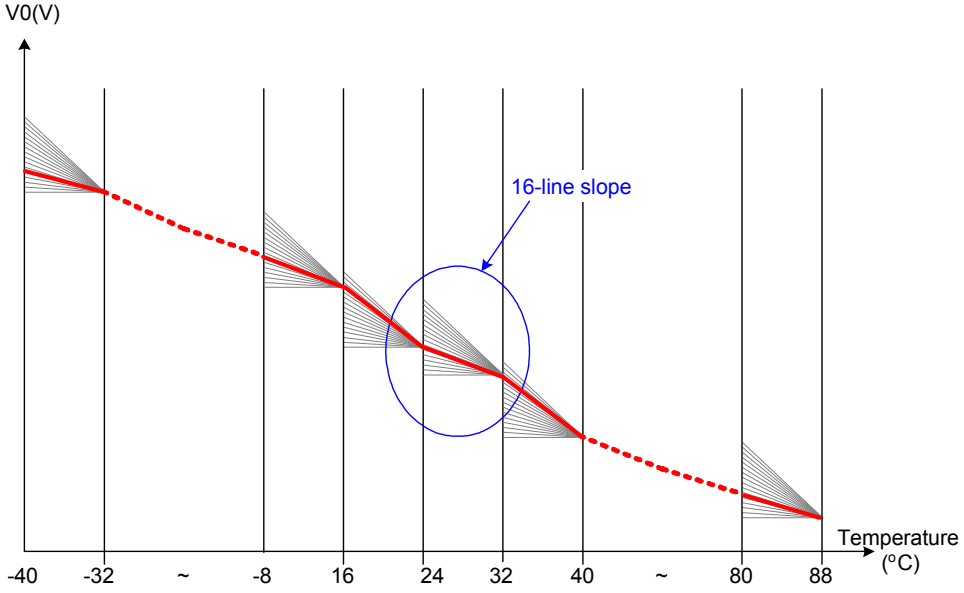

Figure 7.8

In command TEMPSEL each MTx, where x=0, 1, 2,…, E, F, has a value between 0 and 15. MTx = 0 results in 0V increment on V0, MTx = 1 results in Mx=5mV increment, …, MTx = 15 results in Mx=15x5mV=75mV increment. Note that each MTx individually corresponds to a temperature interval; The relations between Mx and V0 quantity due to temperature V0(T) are described in the equations shown as follows:

Temperature range	Equation V0(V) at temperature=T℃
-40℃ ≦ T ＜ -32℃	$V0(T) = V0(T_{24}) + (-32-T) \cdot M0 + (M1 + M2 + M3 + M4 + M5 + M6 + M7) \cdot 8$
-32℃ ≦ T ＜ -24℃	$V0(T) = V0(T_{24}) + (-24-T) \cdot M1 + (M2 + M3 + M4 + M5 + M6 + M7) \cdot 8$
-24℃ ≦ T ＜ -16℃	$V0(T) = V0(T_{24}) + (-16-T) \cdot M2 + (M3 + M4 + M5 + M6 + M7) \cdot 8$
-16℃ ≦ T ＜ -8℃	$V0(T) = V0(T_{24}) + (-8-T) \cdot M3 + (M4 + M5 + M6 + M7) \cdot 8$
-8℃ ≦ T ＜ 0℃	$V0(T) = V0(T_{24}) + (0-T) \cdot M4 + (M5 + M6 + M7) \cdot 8$
0℃ ≦ T ＜ 8℃	$V0(T) = V0(T_{24}) + (8-T) \cdot M5 + (M6 + M7) \cdot 8$
8℃ ≦ T ＜ 16℃	$V0(T) = V0(T_{24}) + (16-T) \cdot M6 + M7 \cdot 8$
16℃ ≦ T ＜ 24℃	$V0(T) = V0(T_{24}) + (24-T) \cdot M7$
24℃ ≦ T ＜ 32℃	$V0(T) = V0(T_{24}) - (T-24) \cdot M8$
32℃ ≦ T ＜ 40℃	$V0(T) = V0(T_{24}) - (T-32) \cdot M9 - M8 \cdot 8$
40℃ ≦ T ＜ 48℃	$V0(T) = V0(T_{24}) - (T-40) \cdot M10 - (M9 + M8) \cdot 8$
48℃ ≦ T ＜ 56℃	$V0(T) = V0(T_{24}) - (T-48) \cdot M11 - (M10 + M9 + M8) \cdot 8$
56℃ ≦ T ＜ 64℃	$V0(T) = V0(T_{24}) - (T-56) \cdot M12 - (M11 + M10 + M9 + M8) \cdot 8$
64℃ ≦ T ＜ 72℃	$V0(T) = V0(T_{24}) - (T-64) \cdot M13 - (M12 + M11 + M10 + M9 + M8) \cdot 8$
72℃ ≦ T ＜ 80℃	$V0(T) = V0(T_{24}) - (T-72) \cdot M14 - (M13 + M12 + M11 + M10 + M9 + M8) \cdot 8$
80℃ ≦ T ＜ 88℃	$V0(T) = V0(T_{24}) - (T-80) \cdot M15 - (M14 + M13 + M12 + M11 + M10 + M9 + M8) \cdot 8$

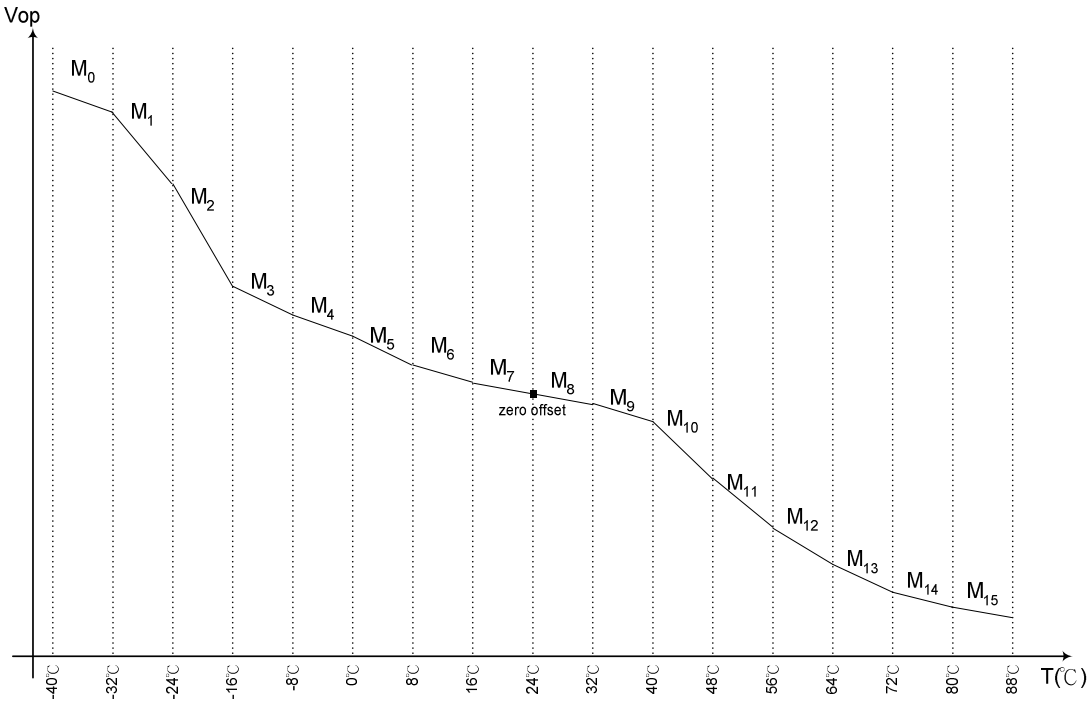

Setting example for default TC curve

Command	
0xF4	
Data	
1st : 0xFF	2nd : 0x36
3rd : 0x04	4th : 0x00
5th : 0x33	6th : 0x42
7th : 0xC4	8th : 0x59

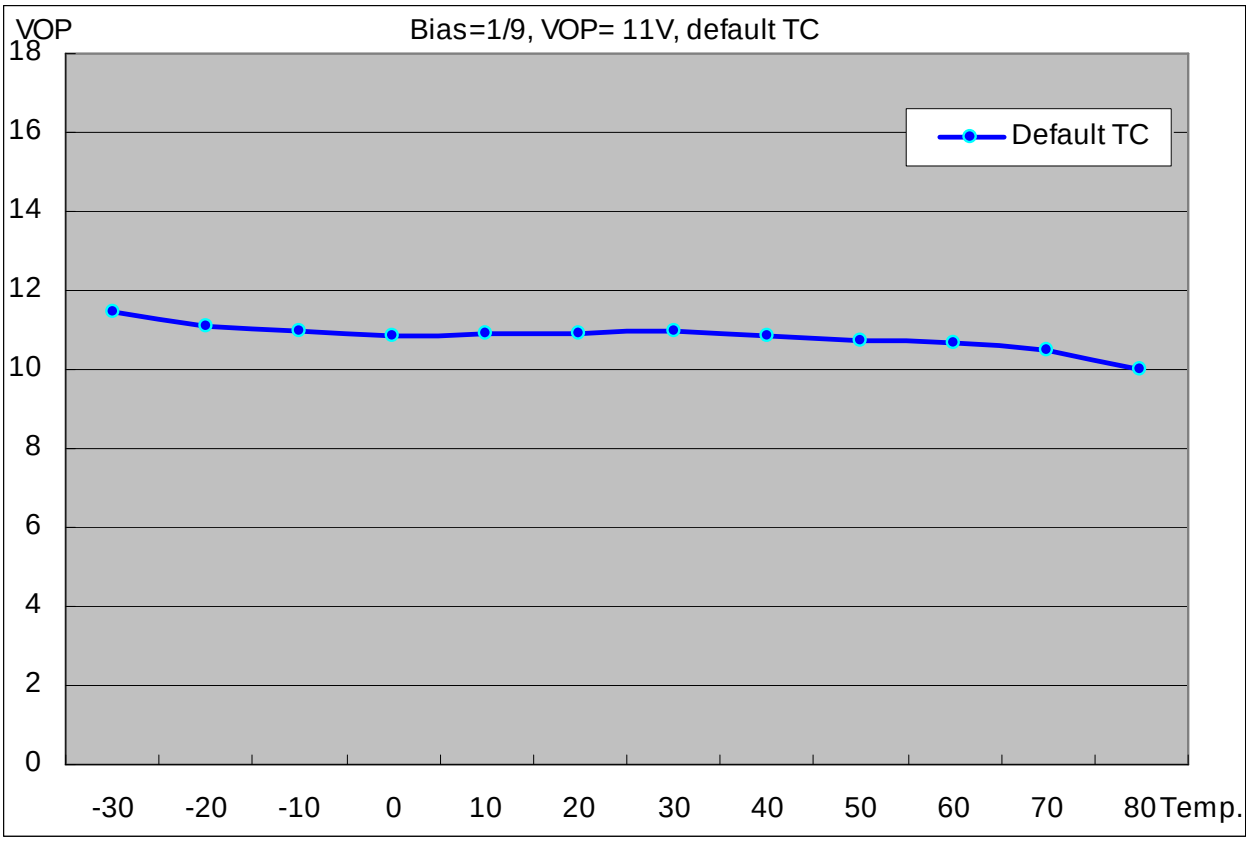

Setting example for TC curve=-0.04%

Command	
0xF4	
Data	
1st : 0x11	2nd : 0x11
3rd : 0x11	4th : 0x11
5th : 0x11	6th : 0x11
7th : 0x11	8th : 0x11

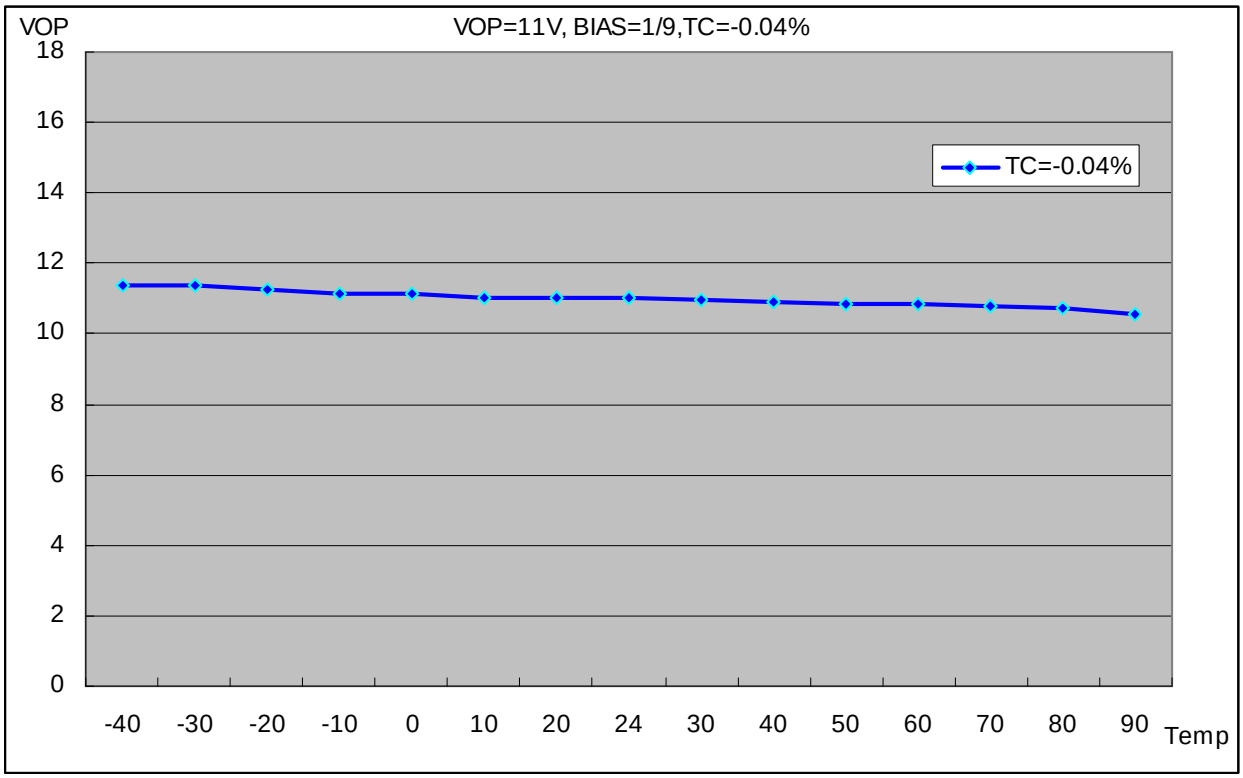

Setting example for TC curve=-0.08%

Command	
0xF4	
Data	
1st : 0x22	2nd : 0x22
3rd : 0x22	4th : 0x22
5th : 0x22	6th : 0x22
7th : 0x22	8th : 0x22

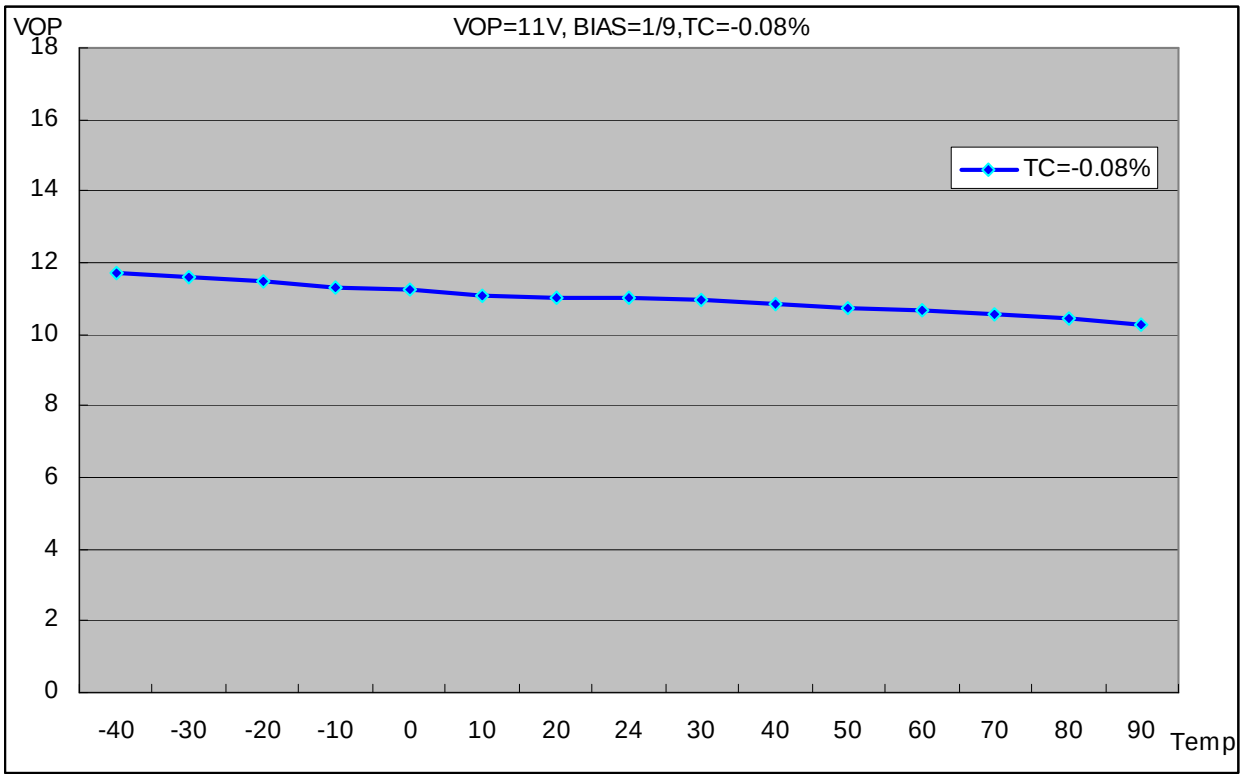

Setting example for TC curve = -0.12%

Command	
0xF4	
Data	
1st : 0x33	2nd : 0x33
3rd : 0x33	4th : 0x33
5th : 0x33	6th : 0x33
7th : 0x33	8th : 0x33

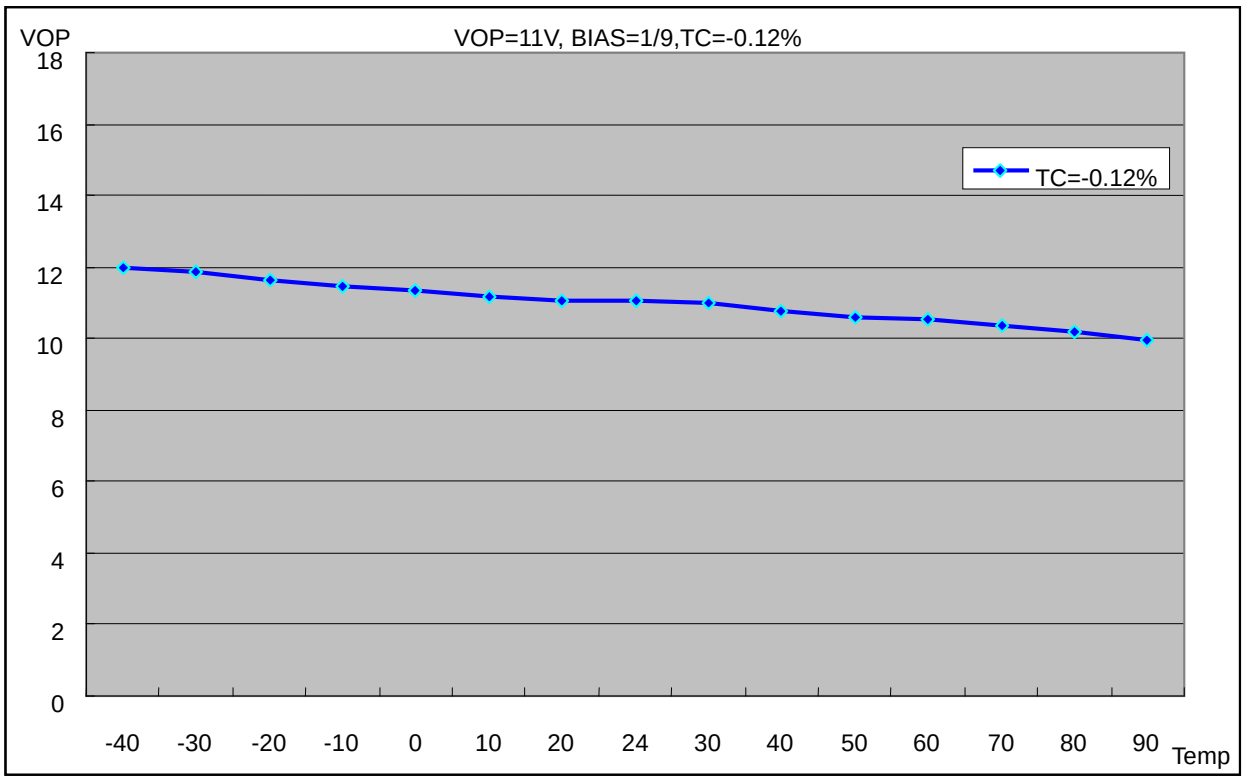

V0 fine tuning

ST7625 has 2 commands for fine tuning V0. These commands are VopOfsetInc and VopOfsetDec. When writing VopOfsetInc into IC for each time, V0 would increase 40mV; when writing VopOfsetDec into IC for each time, V0 would decrease 40mV.

Example:

Vop[8:0]=011010010

Vopoffset[8:0]=000000011

EV[6:0]=0111111

VopOfsetInc x2

→ V0=3.6 + { 210 +3+ (63-63) } x 0.04 + 0.04x2 =12.2 (V)

7.8.2 Voltage Follower Circuits

There is a built-in voltage follower circuits in ST7625 for generating Vg and Vm. These voltages are decided by bias ratio selection circuitry which is set by users with software code. The selection of 1/5 to 1/12 bias ratios can match the optimum display performance of LCD panel. Bias driving rule is listed below:

LCD bias	Vg	Vm
1/N bias	(2/N) x V0	(1/N) x V0

N=5 to 12

7.8.3 OTP Setting Flow

OTP Setting Flow

ST7625 provide the Write and Read function to write the Electronic Control value and Built-in resistance ratio into and read them from the built-in OTP. Using the Write and Read functions, you can store these values appropriate to each LCD panel. This function is very convenient for user in setting from some different panel's voltage. But using this function must attention the setting procedure. Please see the following diagram.

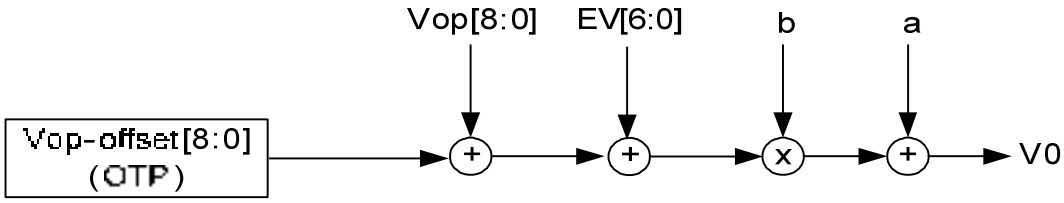

Figure 7.9 V0 value control for different modules by loading OTP offset

Note1: This setting flow is used for LCM assembler.

Note2: OTP shouldn't be written without preceding loading correctly from OTP to avoid some errors during IC operation.

Note3: When writing value to OTP, the voltage of VPP must be within 7.5V~7.75V; the current of Ivpp must be more than 4 mA.

Note4: If the OTP is exposed to a high temperature for hours, data in the memory cell may probably be lost before the data retention guarantee period. To retain data in the memory cell, keep the memory cell below 90℃. The data retention guarantee period is specified including the retention period.

7.8.4 Frquency Temperature Gradient Compensation Coefficient

ST7625 will auto-switch frame rate on different temperature shown in Figure 7.10. TA, TB and TC are frame rate switching temperatures which can be defined by customer with command TMPRNG. FA, FB, FC and FD are switched frame rate which also can be defined by customer with command FRMSEL. The frame rate range is from 37.5Hz to 170Hz.

When the temperature is in increasing state, frame rate changes to the higher step at TA/TB/TC+TH(℃). When the temperature is in decreasing state, frame rate changes to the lower step at TA/TB/TC. For example: TC=10℃ and TH=5℃, FC switches to FD at 15℃ but FD switches to FC at 10℃. Please take Figure 7.10for reference.

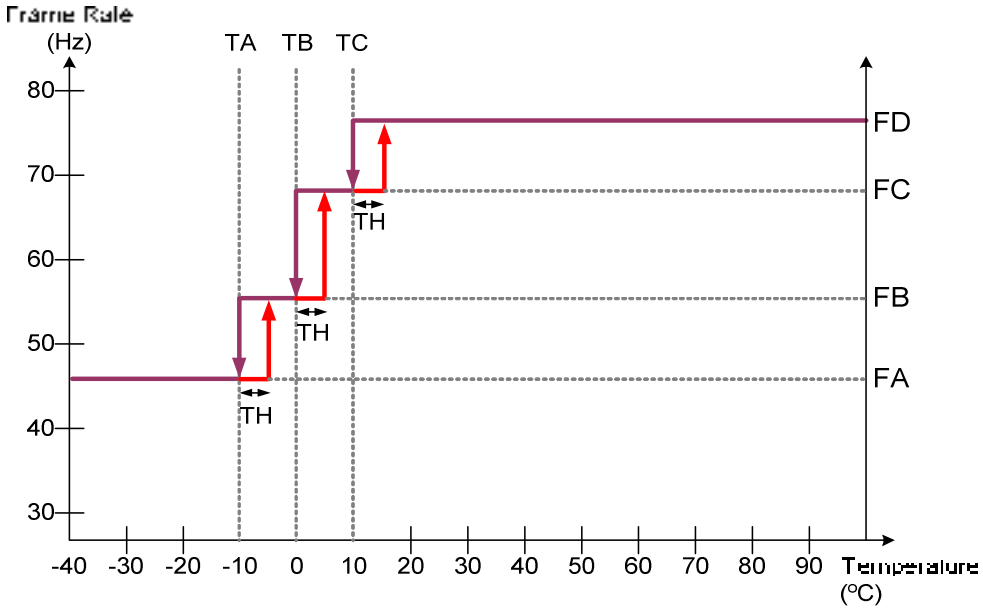

Figure 7.10

8. RESET value

Item	After Power On	After Software Reset	After Hardware Reset
Frame memory (RAM data)	Random	No Change	No Change
Sleep In/Out	In	In	In
Display mode (normal/partial)	Normal	Normal	Normal
Display Inversion On/Off	Off	Off	Off
All Pixel Off mode	Disable	Disable	Disable
All Pixel On mode	Disable	Disable	Disable
Contrast (EV)	3Fh	3Fh	3Fh
Display On/Off	Display Off	Display Off	Display Off
Column: Start Address (XS)	00h	00h	00h
Column: End Address (XE)	65h	65h	65h
Row: Start Address (YS)	00h	00h	00h
Row: End Address (YE)	5Fh	5Fh	5Fh
Partial: Start Address (PS)	00h	00h	00h
Partial: End Address (PE)	5Fh	5Fh	5Fh
Scroll: Top Fixed Area (TFA)	00h	00h	00h
Scroll: Scroll Area (VSA)	65h	65h	65h
Scroll: Bottom Fixed Area (BFA)	00h	00h	00h
Memory Data Access Control MY/MX/MV/ML/RGB)	0/0/0/0/0	No Change	0/0/0/0/0
Scroll Start Address (SSA)	00h	00h	00h
Idle Mode On/Off	Off	Off	Off
Interface Color Pixel Format (P)	05h (16Bit/Pixel)	No change	05h (16Bit/Pixel)
Drive Duty	5Fh	5Fh	5Fh
First Common	00h	00h	00h
FOSC Divider	No division	No division	No division
Common scan direction	0→47, 48→95	0→47, 48→95	0→47, 48→95
Vop	0D2h	0D2h	0D2h
Bias	1/9 Bias	1/9 Bias	1/9 Bias
Booster setting	8x	8x	8x
Booster Efficiency	01	01	01
Vg source	From 2VDD2	From 2VDD2	From 2VDD2
EPCTIN	0	0	0
OTP selection	Disable	Disable	Disable
Frame Frequency in Normal Color (FA/FB/FC/FD)	46Hz/61.5Hz/72/Hz/77Hz	46Hz/61.5Hz/72/Hz/77Hz	46Hz/61.5Hz/72/Hz/77Hz
Temperature Range (TA/TB/TC)	-10℃/0℃/10℃	-10℃/0℃/10℃	-10℃/0℃/10℃
Temperature Hysteresis (TH for frame rate)	5℃	5℃	5℃
TEMPSEL	0 mV/℃	0 mV/℃	0 mV/℃

9. INSTRUCTIONS

9.1 INSTRUCTION table

Command Table-1

Hex	Command	A0	/RD	/WR	D7	D6	D5	D4	D3	D2	D1	D0	Function	Ref
(00h)	NOP	0	1	0	0	0	0	0	0	0	0	0	No Operation	9.1.1
(01h)	SWRESET	0	1	0	0	0	0	0	0	0	0	1	Software reset	9.1.2
(09h)	RDDST	0	1	0	0	0	0	0	1	0	0	1	Read Display Status	9.1.3
-		1	0	1	-	-	-	-	-	-	-	-	Dummy read	
-		1	0	1	ST31	ST30	ST29	ST28	ST27	ST26	ST25	ST24	(D31-D24)	
-		1	0	1	ST23	ST22	ST21	ST20	ST19	ST18	ST17	ST16	(D23-D16)	
-		1	0	1	ST15	ST14	ST13	ST12	ST11	ST10	ST9	ST8	(D15-D8)	
-		1	0	1	ST7	ST6	ST5	ST4	ST3	ST2	ST1	ST0	(D7-D0)	
(10h)	SLPIN	0	1	0	0	0	0	1	0	0	0	0	Sleep in & booster off	9.1.4
(11h)	SLPOUT	0	1	0	0	0	0	1	0	0	0	1	Sleep out & booster on	9.1.5
(12h)	PTLON	0	1	0	0	0	0	1	0	0	1	0	Partial mode on	9.1.6
(13h)	NORON	0	1	0	0	0	0	1	0	0	1	1	Partial off (Normal)	9.1.7
(20h)	INVOFF	0	1	0	0	0	1	0	0	0	0	0	Display inversion off (normal)	9.1.8
(21h)	INVON	0	1	0	0	0	1	0	0	0	0	1	Display inversion on	9.1.9
(22h)	APOFF	0	1	0	0	0	1	0	0	0	1	0	All pixel off (Only for test purpose)	9.1.10
(23h)	APON	0	1	0	0	0	1	0	0	0	1	1	All pixel on (Only for test purpose)	9.1.11
(25h)	WRCNTR	0	1	0	0	0	1	0	0	1	0	1	Write contrast	9.1.12
-		1	1	0	0	EV6	EV5	EV4	EV3	EV2	EV1	EV0	EV = 0 to 127	
(28h)	DISPOFF	0	1	0	0	0	1	0	1	0	0	0	Display off	9.1.13
(29h)	DISPON	0	1	0	0	0	1	0	1	0	0	1	Display on	9.1.14
(2Ah)	CASET	0	1	0	0	0	1	0	1	0	1	0	Column address set	9.1.15
		1	1	0	0	XS6	XS5	XS4	XS3	XS2	XS1	XS0	X_ADR start: 0≦XS≦65h	
		1	1	0	0	XE6	XE5	XE4	XE3	XE2	XE1	XE0	X_ADR end: XS≦XE ≦65h	
(2Bh)	RASET	0	1	0	0	0	1	0	1	0	1	1	Row address set	9.1.16
		1	1	0	0	YS6	YS5	YS4	YS3	YS2	YS1	YS0	Y_ADR start: 0≦YS≦5Fh	
		1	1	0	0	YE6	YE5	YE4	YE3	YE2	YE1	YE0	Y_ADR end: YS≦YE≦5Fh	
(2Ch)	RAMWR	0	1	0	0	0	1	0	1	1	0	0	Memory write	9.1.17
		1	1	0	D7	D6	D5	D4	D3	D2	D1	D0	Write data	

(2Eh)	RAMRD	0	1	0	0	0	1	0	1	1	1	0	Memory Read	9.1.18
		1	1	0	-	-	-	-	-	-	-	-	Dummy read	
		1	1	0	D7	D6	D5	D4	D3	D2	D1	D0		
(30h)	PTLAR	0	1	0	0	0	1	1	0	0	0	0	Partial Area	9.1.19
		1	1	0	--	PS6	PS5	PS4	PS3	PS2	PS1	PS0		
		1	1	0	--	PE6	PE5	PE4	PE3	PE2	PE1	PE0		
(33h)	SCRLAR	0	1	0	0	0	1	1	0	0	1	1	Scroll Area	9.1.20
-		1	1	0	0	TFA6	TFA5	TFA4	TFA3	TFA2	TFA1	TFA0	TFA= 0~95	
-		1	1	0	0	VSA6	VSA5	VSA4	VSA3	VSA2	VSA1	VSA0	VSA= 0~95	
-		1	1	0	0	BFA6	BFA5	BFA4	BFA3	BFA2	BFA1	BFA0	BFA= 0~95	
(36h)	MADCTR	0	1	0	0	0	1	1	0	1	1	0	Memory data access control	9.1.21
-		1	1	0	MY	MX	MV	ML	RGB	-	-	-	-	
(37h)	VSCSAD	0	1	0	0	0	1	1	0	1	1	1	Scroll start address of RAM	9.1.22
		1	1	0	0	SSA6	SSA5	SSA4	SSA3	SSA2	SSA1	SSA0	SSA = 0~95	
(38h)	IDMOFF	0	1	0	0	0	1	1	1	0	0	0	Idle mode off	9.1.23
(39h)	IDMON	0	1	0	0	0	1	1	1	0	0	1	Idle mode on	9.1.24
(3Ah)	COLMOD	0	1	0	0	0	1	1	1	0	1	0	Interface pixel format	9.1.25
-		1	1	0	-	-	-	-	-	P2	P1	P0	Interface format	

Note 1: Commands 10H, 12H, 13H, 20H, 21H, 25H, 28H, 29H, 30H, 36H (Bit ML only), 38H and 39H are updated during V-sync when Module is in Sleep Out Mode to avoid abnormal visual effects.

During Sleep In mode, these commands are updated immediately.

Read status (09H) is updated immediately both in Sleep In mode and Sleep Out mode.

Command Table-2

Hex	Command	A0	/RD	/WR	D7	D6	D5	D4	D3	D2	D1	D0	Function	Ref
(B0h)	DutySet	0	1	0	1	0	1	1	0	0	0	0	Display Duty setting	9.1.26
		1	1	0	0	Du6	Du5	Du4	Du3	Du2	Du1	Du0		
(B1h)	FirstCom	0	1	0	1	0	1	1	0	0	0	1	First Com. Page address	9.1.27
		1	1	0	--	F6	F5	F4	F3	F2	F1	F0		
(B3h)	OscDiv	0	1	0	1	0	1	1	0	0	1	1	FOSC divider	9.1.28
		1	1	0	-	-	-	-	-	-	CLD1	CLD0		
(B5h)	NLInvSet	0	1	0	1	0	1	1	0	1	0	1	N-line control	9.1.29
		1	1	0	M	N6	N5	N4	N3	N2	N1	N0		
(B7h)	SEGScanDir	0	1	0	1	0	1	1	0	1	1	1	Seg Scan Direction for Glass layout	9.1.30
		1	1	0	0	SMX	0	0	SBGR	0	0	0		
(B8h)	RmwIn	0	1	0	1	0	1	1	1	0	0	0	read modify write control IN	9.1.31
(B9h)	RmwOut	0	1	0	1	0	1	1	1	0	0	1	read modify write control Out	9.1.32
(C0h)	VopSet	0	1	0	1	1	0	0	0	0	0	0	Vop setting	9.1.33
		1	1	0	Vop7	Vop6	Vop5	Vop4	Vop3	Vop2	Vop1	Vop0		
		1	1	0	-	-	-	-	-	-	-	Vop8		
(C1h)	VopOfsetInc	0	1	0	1	1	0	0	0	0	0	1	+40mv/setp	9.1.34
(C2h)	VopOfsetDec	0	1	0	1	1	0	0	0	0	1	0	-40mv/setp	9.1.35
(C3h)	BiasSel	0	1	0	1	1	0	0	0	0	1	1	Bias selection	9.1.36
		1	1	0	-	-	-	-	-	Bias2	Bias1	Bias0		
(C4h)	BstBmpXSel	0	1	0	1	1	0	0	0	1	0	0	Booster setting	9.1.37
		1	1	0	-	-	-	-	-	BST2	BST 1	BST0		
(C5h)	BstEffSel	0	1	0	1	1	0	0	0	1	0	1	Booster efficiency selection	9.1.38
		1	1	0	-	-	-	-	-	-	BTF1	BTF0		
(C7h)	VopOffset	0	1	0	1	1	0	0	0	1	1	1	Vop offset fuse bit adjust	9.1.39
		1	1	0	VOS7	VOS6	VOS5	VOS4	VOS3	VOS2	VOS1	VOS0		
		1	1	0	-	-	-	-	-	-	-	VOS8		
(CBh)	VgSorcSel	0	1	0	1	1	0	0	1	0	1	1	FVg with Booster x2 control	9.1.40
		1	1	0	-	-	-	-	-	-	-	2BT0		

(D0h)	ANASET	0	1	0	1	1	0	1	0	0	0	0	Analog circuit setting	9.1.41
		1	1	0	0	0	0	1	1	1	0	1		
(D7h)	AutoLoadSet	0	1	0	1	1	0	1	0	1	1	1	Mask ROM data auto re-load control	9.1.42
		1	1	0	0	0	0	ARD	1	1	1	1		
(DEh)	RDTstStatus	0	1	0	1	1	0	1	1	1	1	0	Read IC status	9.1.43
		1	0	1	-	-	-	-	-	-	-	-	Dummy Read	
		1	0	1	RD7	RD6	RD5	RD4	RD3	RD2	RD1	RD0	OTP read control	
(E0h)	EPCTIN	0	1	0	1	1	1	0	0	0	0	0	Control OTP WR/RD	9.1.44
		1	1	0	0	0	EWR	0	0	0	0	0	OTP ROM Write Control	
(E1h)	EPCTOUT	0	1	0	1	1	1	0	0	0	0	1	OTP control cancel	9.1.45
(E2h)	EPMWR	0	1	0	1	1	1	0	0	0	1	0	Write to OTP	9.1.46
(E3h)	EPMRD	0	1	0	1	1	1	0	0	0	1	1	Read from OTP	9.1.47
(E4h)	OTPSEL	0	1	0	1	1	1	0	0	1	0	0	Select OTP	9.1.48
		1	1	0	MS1	MS0	0	1	1	0	0	0		
(E5h)	ROMSET	0	1	0	1	1	1	0	0	1	0	1	Programmable rom setting	9.1.49
		1	1	0	0	0	0	0	1	0	0	1		
(EBh)	HPMSET	0	1	0	1	1	1	0	1	0	1	1	High power mode setting	9.1.50
		1	1	0	0	0	0	0	0	0	0	1		
		1	1	0	0	0	0	0	0	0	0	0		
(F0h)	FRMSEL	0	1	0	1	1	1	1	0	0	0	0	Frame Freq. in Temp range A,B,C and D	9.1.51
		1	1	0	-	-	-	DIVA	FA3	FA2	FA1	FA0		
		1	1	0	-	-	-	DIVB	FB3	FB2	FB1	FB0		
		1	1	0	-	-	-	DIVC	FC3	FC2	FC1	FC0		
		1	1	0	-	-	-	DIVD	FD3	FD2	FD1	FD0		
(F1h)	FRM8SEL	0	1	0	1	1	1	1	0	0	0	1	Frame Freq. in Temp range A,B,C and D (idle)	9.1.52
		1	1	0	-	-	-	F8A4	F8A3	F8A2	F8A1	F8A0		
		1	1	0	-	-	-	F8B4	F8B3	F8B2	F8B1	F8B0		
		1	1	0	-	-	-	F8C4	F8C3	F8C2	F8C1	F8C0		
		1	1	0	-	-	-	F8D4	F8D3	F8D2	F8D1	F8D0		
(F2h)	TMPRNG	0	1	0	1	1	1	1	0	0	1	0	Temp range A,B and C	9.1.53
		1	1	0	-	TA6	TA5	TA4	TA3	TA2	TA1	TA0		
		1	1	0	-	TB6	TB5	TB4	TB3	TB2	TB1	TB0		
		1	1	0	-	TC6	TC5	TC4	TC3	TC2	TC1	TC0		

(F3h)	TMPHYS	0	1	0	1	1	1	1	0	0	1	1	Hysteresis value set	9.1.54
		1	1	0	-	-	-	-	TH3	TH2	TH1	TH0		
(F4h)	TEMPSEL	0	1	0	1	1	1	1	0	1	0	0	TEMPSEL	9.1.55
		1	1	0	MT13	MT12	MT11	MT10	MT03	MT02	MT01	MT00		
		1	1	0	MT33	MT32	MT31	MT30	MT23	MT22	MT21	MT20		
		1	1	0	MT53	MT52	MT51	MT50	MT43	MT42	MT41	MT40		
		1	1	0	MT73	MT72	MT71	MT70	MT63	MT62	MT61	MT60		
		1	1	0	MT93	MT92	MT91	MT90	MT83	MT82	MT81	MT80		
		1	1	0	MTB3	MTB2	MTB1	MTB0	MTA3	MTA2	MTA1	MTA0		
		1	1	0	MTD3	MTD2	MTD1	MTD0	MTC3	MTC2	MTC1	MTC0		
		1	1	0	MTF3	MTF2	MTF1	MTF0	MTE3	MTE2	MTE1	MTE0		
(F7h)	THYS	0	1	0	1	1	1	1	0	1	1	1	Temperature detection threshold	9.1.56
		1	1	0	THYS 7	THYS 6	THYS 5	THYS 4	THYS 3	THYS 2	THYS 1	THYS 0		
(F9h)	Frame Set	0	1	0	1	1	1	1	1	0	0	1	Set Frame1 RGB value	9.1.57
		1	1	0	-	-	-	P14	P13	P12	P11	P10		
		1	1	0	-	-	-	P24	P23	P22	P21	P20		
		:	:	:	:	:	:	:	:	:	:	:		
		1	1	0	-	-	-	P154	P153	P152	P151	P150		
		1	1	0	-	-	-	P164	P163	P162	P161	P160		

9.1.1 NOP(00H)

Command	*A0*	*/RD*	*/WR*	*D7*	*D6*	*D5*	*D4*	*D3*	*D2*	*D1*	*D0*	*Hex*
NOP	0	1	0	0	0	0	0	0	0	0	0	**(00h)**
Parameter	No Parameter											

Description	This command is empty command. It does not have effect on the display module. However it can be used to terminate RAM data write as described in RAMWR (Memory Write) and parameter write commands.
Restriction	-
Register Availability	

Status	Availability
Normal Mode On, Idle Mode Off, Sleep Out	Yes
Normal Mode On, Idle Mode On, Sleep Out	Yes
Partial Mode On, Idle Mode Off, Sleep Out	Yes
Partial Mode On, Idle Mode On, Sleep Out	Yes
Sleep In	Yes

Default

Status	Default Value
Power On Sequence	N/A
S/W Reset	N/A
H/W Reset	N/A

Flow Chart	-

9.1.2 SWRESET: Software Reset (01H)

Command	*A0*	*/RD*	*/WR*	*D7*	*D6*	*D5*	*D4*	*D3*	*D2*	*D1*	*D0*	*Hex*
SWRESET	0	1	0	0	0	0	0	0	0	0	1	**(01h)**
Parameter	No Parameter											

Description

When the Software Reset command is written, it causes a software reset. It resets the commands and parameters to their S/W Reset default values and all segment & common outputs are set to Vm (display off: blank display). (See default tables in each command description)
Note: The Frame Memory contents are not affected by this command.

Restriction

It will be necessary to wait 5msec before sending new command following software reset. The display module loads all display supplier's factory default values to the registers during 5msec. If Software Reset is applied during Sleep Out mode, it will be necessary to wait 120msec before sending Sleep Out command.
Software Reset command cannot be sent during Sleep Out sequence.

Register Availability

Status	Availability
Normal Mode On, Idle Mode Off, Sleep Out	Yes
Normal Mode On, Idle Mode On, Sleep Out	Yes
Partial Mode On, Idle Mode Off, Sleep Out	Yes
Partial Mode On, Idle Mode On, Sleep Out	Yes
Sleep In	Yes

Default

Status	Default Value
Power On Sequence	N/A
S/W Reset	N/A
H/W Reset	N/A

Flow Chart

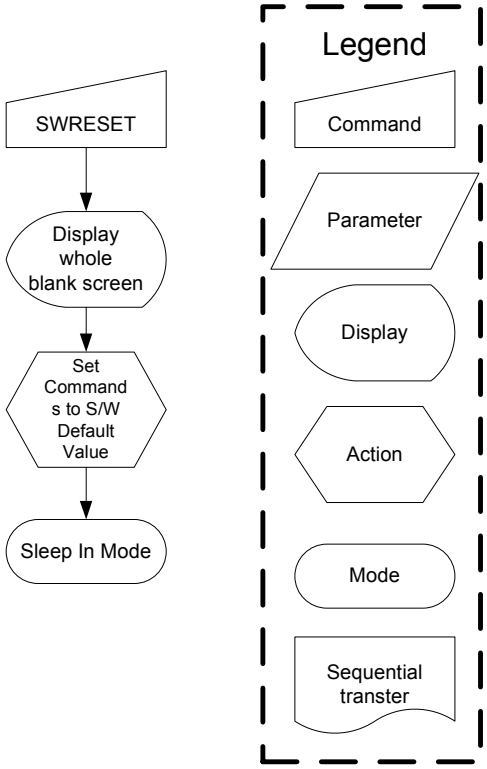

9.1.3 RDDST: Read Display Status (09H)

Command	*A0*	*/RD*	*/WR*	*D7*	*D6*	*D5*	*D4*	*D3*	*D2*	*D1*	*D0*	*Hex*
RDDST	0	1	0	0	0	0	0	1	0	0	1	**(09h)**
Dummy Read	1	0	1	-	-	-	-	-	-	-	-	-
2nd parameter	1	0	1	ST31	ST30	ST29	ST28	ST27	ST26	ST25	ST24	-
3rd parameter	1	0	1	ST23	ST22	ST21	ST20	ST19	ST18	ST17	ST16	-
4th parameter	1	0	1	ST15	ST14	ST13	ST12	ST11	ST10	ST9	ST8	-
5th parameter	1	0	1	ST7	ST6	ST5	ST4	ST3	ST2	ST1	ST0	-

NOTE: "-" Don't care

Description

This command indicates the current status of the display as described in the table below:

Bit	Description	Value
ST31	Booster Voltage Status	"1"=Booster on, "0"=off
ST30	Row Address Order (MY)	"1"=Decrement, "0"=Increment
ST29	Column Address Order (MX)	"1"=Decrement, "0"=Increment
ST28	Row/Column Order (MV)	"1"= Row/column exchange (MV=1) "0"= Normal (MV=0)
ST27	Scan Address Order (ML)	"1"=Decrement, "0"=Increment
ST26	RGB/BGR Order (RGB)	"1"=BGR, "0"=RGB
ST25	Not Used	"0"
ST24	Not Used	"0"
ST23	Not Used	"0"
ST22 ST21 ST20	Interface Color Pixel Format Definition	"010" = 8-bit / pixel, "011" = 12-bit / pixel type A "100" = 12-bit / pixel type B "101" = 16-bit / pixel, "110" = 18-bit / pixel, "111" = 24-bit / pixel
ST19	Idle Mode On/Off	"1" = On, "0" = Off
ST18	Partial Mode On/Off	"1" = On, "0" = Off
ST17	Sleep In/Out	"1" = Out, "0" = In
ST16	Display Normal Mode On/Off	"1" = Normal Display, "0" = Partial Display
ST15	Vertical Scrolling Status	"1" = Scroll on, "0" = Scroll off
ST14	Not Used	"0"
ST13	Inversion Status	"1" = On, "0" = Off
ST12	All Pixels On	"1" = mode On, "0" = mode Off
ST11	All Pixels Off	"1" = mode On, "0" = mode Off
ST10	Display On/Off	"1" = On, "0" = Off
ST9	Internal Use	--
ST8	Not Used	"0"
ST7	Not Used	"0"
ST6	Not Used	"0"
ST5	Internal Use	--
ST4	Not Used	"0"
ST3	Not Used	"0"
ST2	Not Used	"0"
ST1	Not Used	"0"
ST0	Not Used	"0"

Restriction

Register Availability

Status	Availability
Normal Mode On, Idle Mode Off, Sleep Out	Yes
Normal Mode On, Idle Mode On, Sleep Out	Yes
Partial Mode On, Idle Mode Off, Sleep Out	Yes
Partial Mode On, Idle Mode On, Sleep Out	Yes
Sleep In	Yes

Default

Status	Default Value (ST31 to ST0)
Power On Sequence	0000 0000_0101 0001_0000 0000_0000 0000
S/W Reset	0xxx xx00_0xxx 0001_0000 0000_0000 0000
H/W Reset	0000 0000_0101 0001_0000 0000_0000 0000

Flow Chart

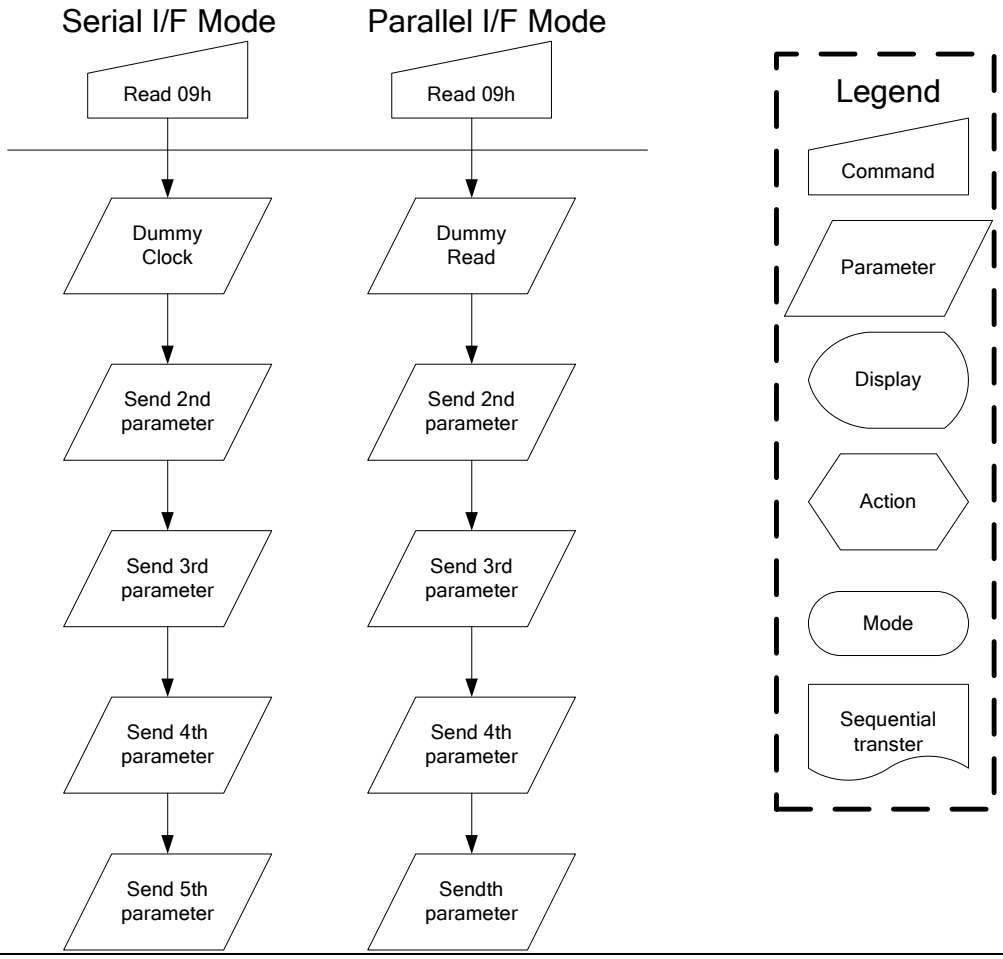

9.1.4 SLPIN: Sleep In (10H)

Command	*A0*	*/RD*	*/WR*	*D7*	*D6*	*D5*	*D4*	*D3*	*D2*	*D1*	*D0*	*Hex*
SLPIN	0	1	0	0	0	0	1	0	0	0	0	**(10h)**
Parameter	No Parameter											

Description

This command causes the LCD module to enter the minimum power consumption mode.
In this mode the DC/DC converter is stopped, Internal display oscillator is stopped, and panel scanning is stopped.

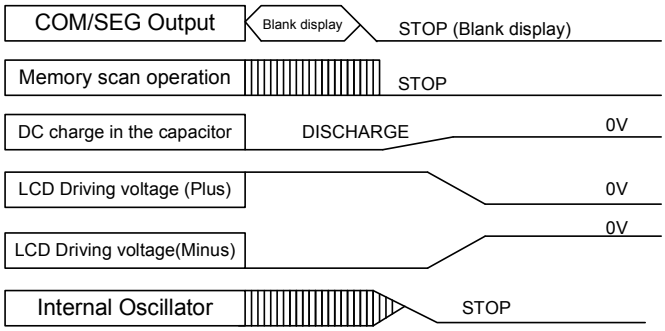

MCU interface and memory are still working and the memory keeps its contents

Restriction

This command has no effect when module is already in sleep in mode. Sleep In Mode can only be exit by the Sleep Out Command (11h).
It will be necessary to wait 5msec before sending the next command. This is for allowing time to stablilize supply voltages and clock circuits.
It will be necessary to wait 120msec after sending Sleep Out command (when in Sleep In Mode) before Sleep In command can be sent.

Register Availability

Status	Availability
Normal Mode On, Idle Mode Off, Sleep Out	Yes
Normal Mode On, Idle Mode On, Sleep Out	Yes
Partial Mode On, Idle Mode Off, Sleep Out	Yes
Partial Mode On, Idle Mode On, Sleep Out	Yes
Sleep In	Yes

Default

Status	Default Value
Power On Sequence	Sleep in mode
S/W Reset	Sleep in mode
H/W Reset	Sleep in mode

Flow Chart	It takes about 120 msec to get into Sleep In mode (booster off state) after SLPIN command issued. The results of booster off can be check by RDDST (09h) command Bit31. 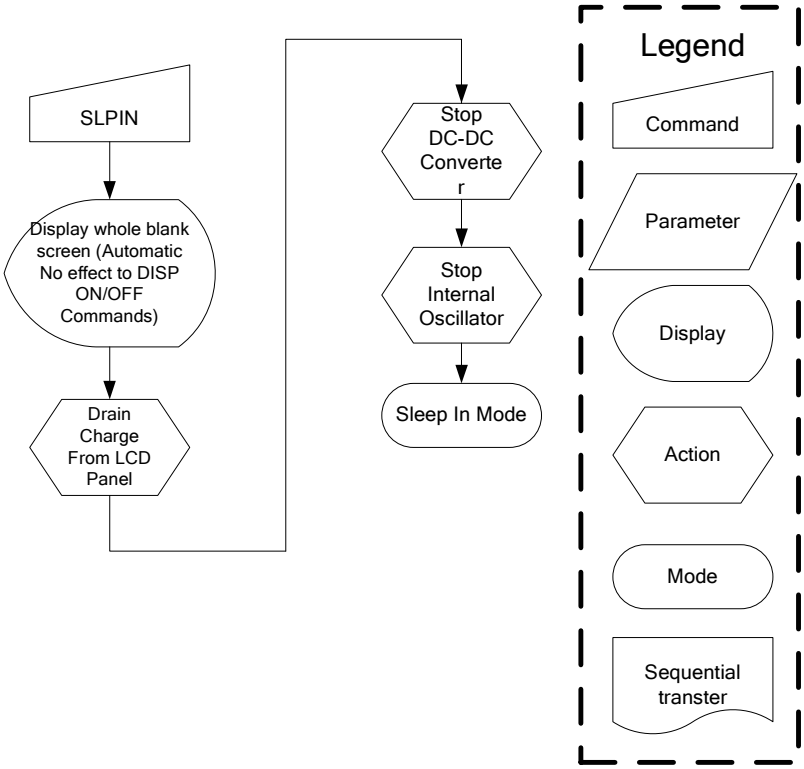

9.1.5 SLPOUT: Sleep Out (11H)

Command	*A0*	*/RD*	*/WR*	*D7*	*D6*	*D5*	*D4*	*D3*	*D2*	*D1*	*D0*	*Hex*
SLPOUT	0	1	0	0	0	0	1	0	0	0	1	**(11h)**
Parameter	No Parameter											

Description

This command turns off sleep mode. In this mode the DC/DC converter is enabled, Internal display oscillator is started, and panel scanning is started.

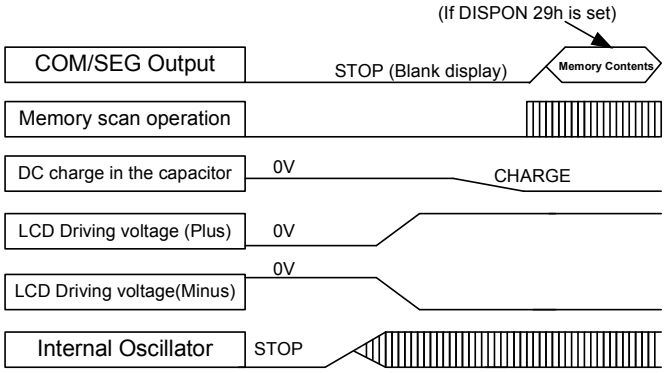

Restriction

This command has no effect when module is already in sleep out mode. Sleep Out Mode can only be exit by the Sleep In Command (10h).
It will be necessary to wait 5msec before sending the next command. This is for allowing time to stablilize supply voltages and clock circuits.
The display module loads all display supplier's factory default values to the registers during this 5msec and there cannot be any abnormal visual effect on the display image if factory default and register values are same when this load is done and when the display module is already Sleep Out –mode.
It will be necessary to wait 120msec after sending Sleep In command (when in Sleep Out mode) before Sleep Out command can be sent.

Register Availability

Status	Availability
Normal Mode On, Idle Mode Off, Sleep Out	Yes
Normal Mode On, Idle Mode On, Sleep Out	Yes
Partial Mode On, Idle Mode Off, Sleep Out	Yes
Partial Mode On, Idle Mode On, Sleep Out	Yes
Sleep In	Yes

Default

Status	Default Value
Power On Sequence	Sleep in mode
S/W Reset	Sleep in mode
H/W Reset	Sleep in mode

Flow Chart	It takes 120msec to become Sleep Out mode (booster on mode) after SLPOUT command issued. The results of booster on can be check by RDDST (09h) command Bit31. 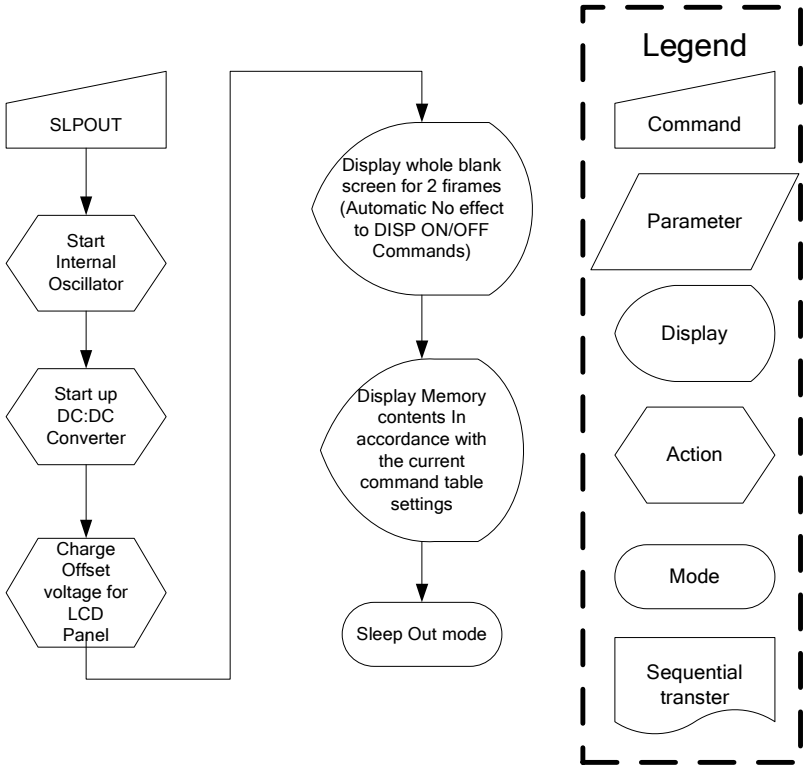

9.1.6 PTLON: Partial Display Mode On (12H)

Command	*A0*	*/RD*	*/WR*	*D7*	*D6*	*D5*	*D4*	*D3*	*D2*	*D1*	*D0*	*Hex*
PTLON	0	1	0	0	0	0	1	0	0	1	0	**(12h)**
Parameter	No Parameter											

Description	This command turns on Partial mode. The partial mode window is described by the Partial Area command (30H) Exit from PTLON by Normal Display Mode On command (13H) There is no abnormal visual effect during mode change between Normal mode On <-> Partial mode On.
Restriction	This command has no effect when Partial mode is active.
Register Availability	

Status	Availability
Normal Mode On, Idle Mode Off, Sleep Out	Yes
Normal Mode On, Idle Mode On, Sleep Out	Yes
Partial Mode On, Idle Mode Off, Sleep Out	Yes
Partial Mode On, Idle Mode On, Sleep Out	Yes
Sleep In	Yes

Default

Status	Default Value
Power On Sequence	Partial mode off
S/W Reset	Partial mode off
H/W Reset	Partial mode off

Flow Chart	See Partial Area (30h)

9.1.7 NORON: Normal Display Mode On (13H)

Command	*A0*	*/RD*	*/WR*	*D7*	*D6*	*D5*	*D4*	*D3*	*D2*	*D1*	*D0*	*Hex*
NORON	0	1	0	0	0	0	1	0	0	1	1	**(13h)**
Parameter	No Parameter											

Description	This command returns the display to normal mode. Normal display mode on means Partial mode off, Scroll mode Off. Exit from NORON by the Partial mode On command (12h) There is no abnormal visual effect during mode change between Normal mode On <-> Partial mode On.
Restriction	This command has no effect when Normal Display mode is active.
Register Availability	

Status	Availability
Normal Mode On, Idle Mode Off, Sleep Out	Yes
Normal Mode On, Idle Mode On, Sleep Out	Yes
Partial Mode On, Idle Mode Off, Sleep Out	Yes
Partial Mode On, Idle Mode On, Sleep Out	Yes
Sleep In	Yes

Default

Status	Default Value
Power On Sequence	Normal Mode On
S/W Reset	Normal Mode On
H/W Reset	Normal Mode On

Flow Chart	See Partial Area and Vertical Scrolling Definition Descriptions for details of when to use this command

9.1.8 INVOFF: Display Inversion Off (20H)

Command	*A0*	*/RD*	*/WR*	*D7*	*D6*	*D5*	*D4*	*D3*	*D2*	*D1*	*D0*	*Hex*
INVOFF	0	1	0	0	0	1	0	0	0	0	0	**(20h)**
Parameter	No Parameter											

Description

This command is used to recover from display inversion mode.
This command makes no change of contents of frame memory.
This command does not change any other status.

(Example)

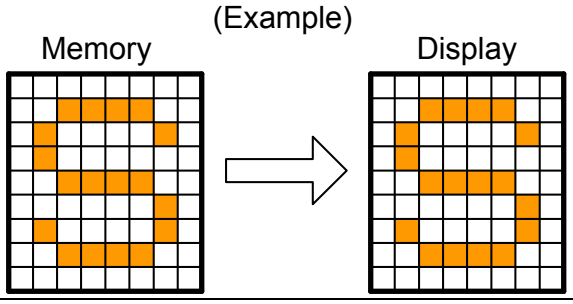

Restriction

This command has no effect when module is already inversion off mode.

Register Availability

Status	Availability
Normal Mode On, Idle Mode Off, Sleep Out	Yes
Normal Mode On, Idle Mode On, Sleep Out	Yes
Partial Mode On, Idle Mode Off, Sleep Out	Yes
Partial Mode On, Idle Mode On, Sleep Out	Yes
Sleep In	Yes

Default

Status	Default Value
Power On Sequence	Display Inversion off
S/W Reset	Display Inversion off
H/W Reset	Display Inversion off

Flow Chart

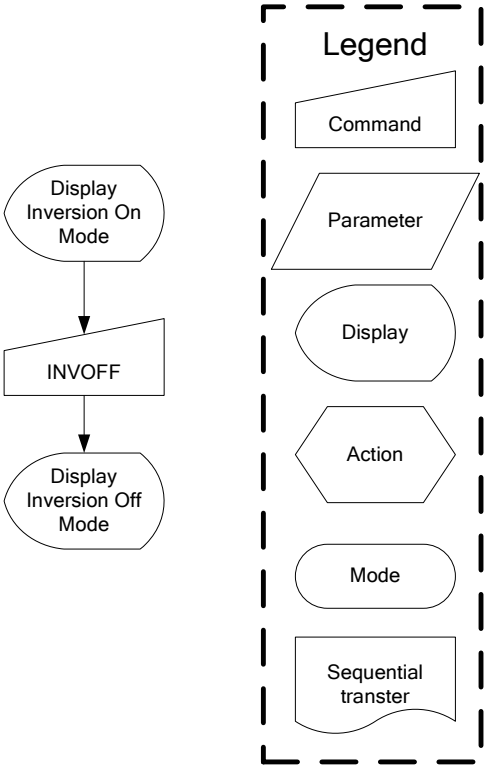

9.1.9 INVON: Display Inversion On (21H)

Command	*A0*	*/RD*	*/WR*	*D7*	*D6*	*D5*	*D4*	*D3*	*D2*	*D1*	*D0*	*Hex*
INVON	0	1	0	0	0	1	0	0	0	0	1	**(21h)**
Parameter	No Parameter											

Description

This command is used to enter into display inversion mode
This command makes no change of contents of frame memory.
This command does not change any other status.
To exit from Display Inversion On, the Display Inversion Off command (20h) should be written.

(Example)

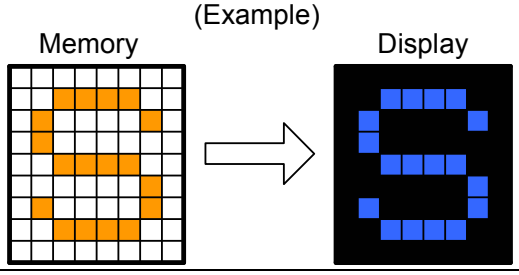

Restriction

This command has no effect when module is already Inversion On mode.

Register Availability

Status	Availability
Normal Mode On, Idle Mode Off, Sleep Out	Yes
Normal Mode On, Idle Mode On, Sleep Out	Yes
Partial Mode On, Idle Mode Off, Sleep Out	Yes
Partial Mode On, Idle Mode On, Sleep Out	Yes
Sleep In	Yes

Default

Status	Default Value
Power On Sequence	Display Inversion off
S/W Reset	Display Inversion off
H/W Reset	Display Inversion off

Flow Chart

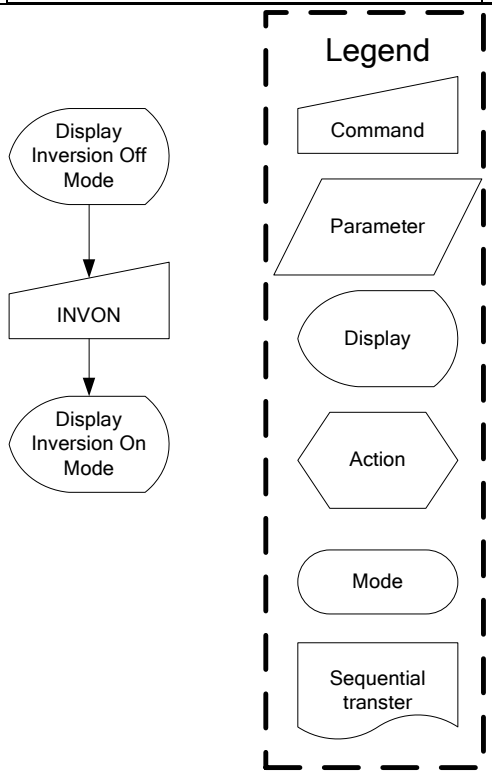

9.1.10 APOFF: All Pixels Off (22H)

Command	*A0*	*/RD*	*/WR*	*D7*	*D6*	*D5*	*D4*	*D3*	*D2*	*D1*	*D0*	*Hex*
APOFF	0	1	0	0	0	1	0	0	0	1	0	**(22h)**
Parameter	No Parameter											

Description

This command is only used for test purpose e.g. pixel response time (on/off) measurements on the passive matrix display. Therefore, it is possible that this command is not used for final product software.
All driver outputs become “Low” data state and display becomes black.
This command makes no change of contents of display memory.
This command does not change any other status.
Exit commands are “All Pixels On”, “Normal Display Mode On” and “Partial Display On”.
The display is showing the contents of the frame memory after “Normal Display Mode On” and “Partial Display On” commands.

(Example)

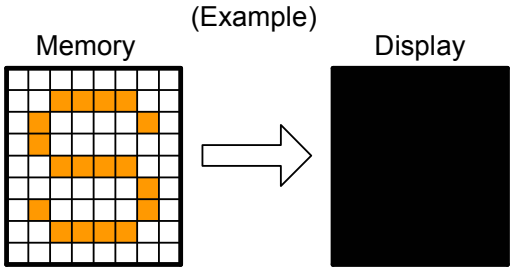

Restriction

This command has no effect when module is already All Pixel Off mode.

Register Availability

Status	Availability
Normal Mode On, Idle Mode Off, Sleep Out	Yes
Normal Mode On, Idle Mode On, Sleep Out	Yes
Partial Mode On, Idle Mode Off, Sleep Out	Yes
Partial Mode On, Idle Mode On, Sleep Out	Yes
Sleep In	Yes

Default

Status	Default Value
Power On Sequence	All pixel off mode disable
S/W Reset	All pixel off mode disable
H/W Reset	All pixel off mode disable

Flow Chart	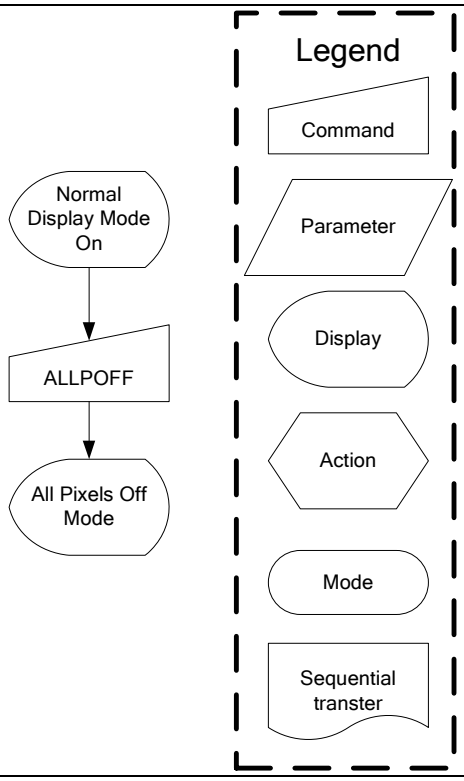 Normal Display Mode On ALLPOFF All Pixels Off Mode Legend Command Parameter Display Action Mode Sequential transter

9.1.11 APON: All Pixels On (23H)

Command	*A0*	*/RD*	*/WR*	*D7*	*D6*	*D5*	*D4*	*D3*	*D2*	*D1*	*D0*	*Hex*
APON	0	1	0	0	0	1	0	0	0	1	1	**(23h)**
Parameter	No Parameter											

Description

This command is only used for test purpose e.g. pixel response time (on/off) measurements on the passive matrix display. Therefore, it is possible that this command is not used for final product software.
All driver outputs become “High” data state and display becomes white.
This command makes no change of contents of display memory.
This command does not change any other status.
Exit commands are “All Pixels On”, “Normal Display Mode On” and “Partial Display On”.
The display is showing the contents of the frame memory after “Normal Display Mode On” and “Partial Display On” commands.

(Example)

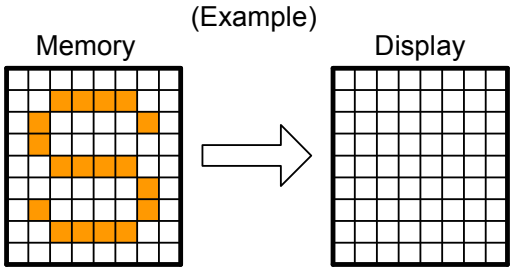

Restriction

This command has no effect when module is already All Pixel On mode.

Register Availability

Status	Availability
Normal Mode On, Idle Mode Off, Sleep Out	Yes
Normal Mode On, Idle Mode On, Sleep Out	Yes
Partial Mode On, Idle Mode Off, Sleep Out	Yes
Partial Mode On, Idle Mode On, Sleep Out	Yes
Sleep In	Yes

Default

Status	Default Value
Power On Sequence	All pixel on mode disable
S/W Reset	All pixel on mode disable
H/W Reset	All pixel on mode disable

Flow Chart

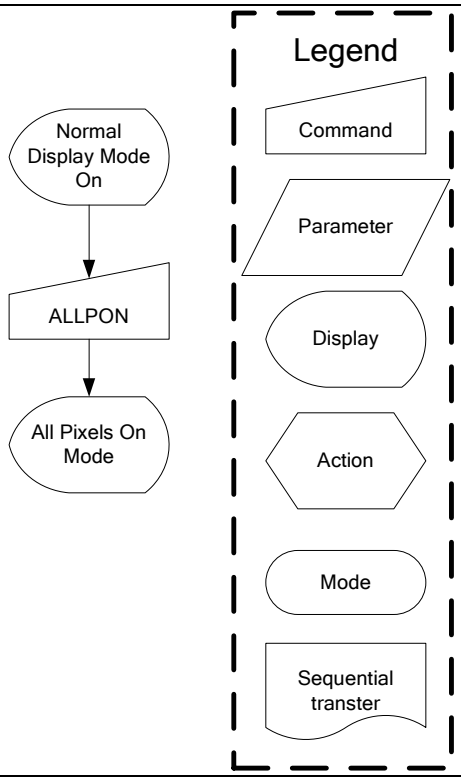
Normal Display Mode On
ALLPON
All Pixels On Mode
Legend
Command
Parameter
Display
Action
Mode
Sequential transter

9.1.12 WRCNTR: Write Contrast (25H)

Command	*A0*	*/RD*	*/WR*	*D7*	*D6*	*D5*	*D4*	*D3*	*D2*	*D1*	*D0*	*Hex*
WRCNTR	0	1	0	0	0	1	0	0	1	0	1	**(25h)**
Parameter	1	1	0		EV6	EV5	EV4	EV3	EV2	EV1	EV0	

Description

This command is used to fine tuning the contrast of the current display.
This contrast values can affect segment and common outputs.
Parameter range: 0-127dec. MSB is EV6 and LSB is EV0.
Default value: 63dec (3Fh)

Restriction

-

Register Availability

Status	Availability
Normal Mode On, Idle Mode Off, Sleep Out	Yes
Normal Mode On, Idle Mode On, Sleep Out	Yes
Partial Mode On, Idle Mode Off, Sleep Out	Yes
Partial Mode On, Idle Mode On, Sleep Out	Yes
Sleep In	Yes

Default

Status	Default Value
Power On Sequence	3Fh
S/W Reset	3Fh
H/W Reset	3Fh

Flow Chart

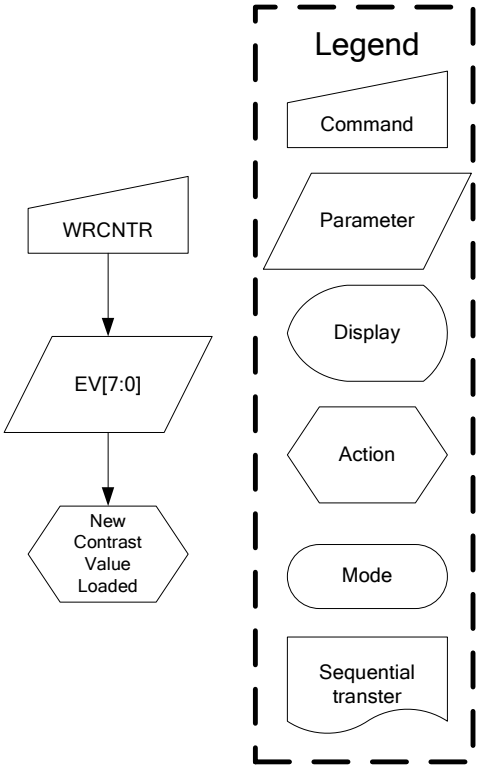

9.1.13 DISPOFF: Display Off (28H)

Command	*A0*	*/RD*	*/WR*	*D7*	*D6*	*D5*	*D4*	*D3*	*D2*	*D1*	*D0*	*Hex*
DISPOFF	0	1	0	0	0	1	0	1	0	0	0	**(28h)**
Parameter	No Parameter											

Description

This command is used to enter into DISPLAY OFF mode. In this mode, the output from Frame Memory is disables and blank page inserted.
This command makes no change of contents of frame memory.
This command does not change any other status.
There will be no abnormal visible effect on the display.
Exit from this command by Display On (29h)

(Example)

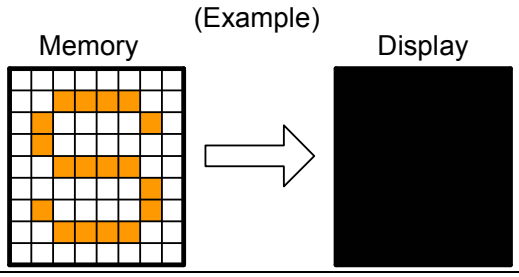

Restriction

This command has no effect when module is already in Display Off mode.

Register Availability

Status	Availability
Normal Mode On, Idle Mode Off, Sleep Out	Yes
Normal Mode On, Idle Mode On, Sleep Out	Yes
Partial Mode On, Idle Mode Off, Sleep Out	Yes
Partial Mode On, Idle Mode On, Sleep Out	Yes
Sleep In	Yes

Default

Status	Default Value
Power On Sequence	Display off
S/W Reset	Display off
H/W Reset	Display off

Flow Chart

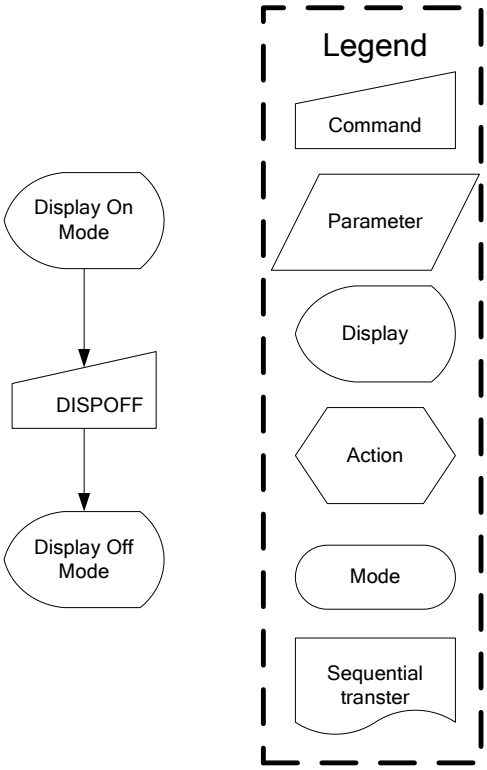

9.1.14 DISPON: Display On (29H)

Command	*A0*	*/RD*	*/WR*	*D7*	*D6*	*D5*	*D4*	*D3*	*D2*	*D1*	*D0*	*Hex*
DISPON	0	1	0	0	0	1	0	1	0	0	1	**(29h)**
Parameter	No Parameter											

Description

Turn on the display screen according to the current display data RAM content and the display timing and setting.
This command is used to recover from DISPLAY OFF mode. Output from the Frame Memory is enabled.
This command makes no change of contents of frame memory.
This command does not change any other status.

(Example)

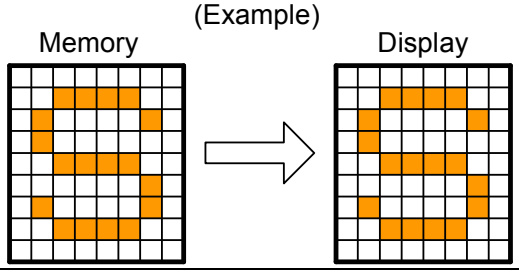

Restriction

This command has no effect when module is already in Display On mode.

Register Availability

Status	Availability
Normal Mode On, Idle Mode Off, Sleep Out	Yes
Normal Mode On, Idle Mode On, Sleep Out	Yes
Partial Mode On, Idle Mode Off, Sleep Out	Yes
Partial Mode On, Idle Mode On, Sleep Out	Yes
Sleep In	Yes

Default

Status	Default Value
Power On Sequence	Display off
S/W Reset	Display off
H/W Reset	Display off

Flow Chart

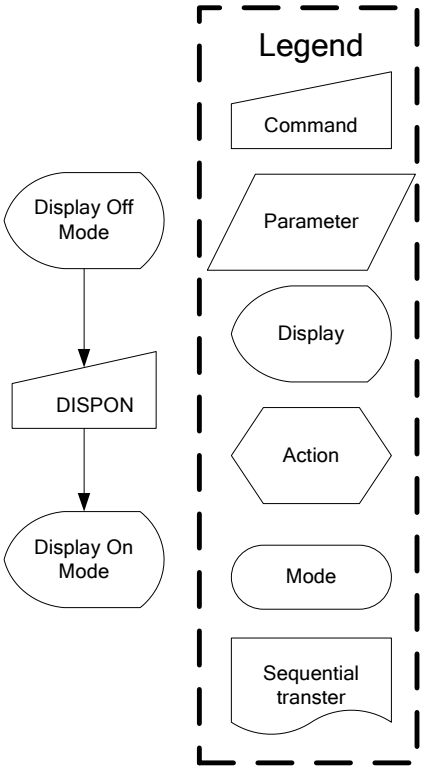

9.1.15 CASET: Column Address Set (2AH)

Command	*A0*	*/RD*	*/WR*	*D7*	*D6*	*D5*	*D4*	*D3*	*D2*	*D1*	*D0*	*Hex*
CASET	0	1	0	0	0	1	0	1	0	1	0	**(2Ah)**
1st Parameter	1	1	0	-	XS6	XS5	XS4	XS3	XS2	XS1	XS0	
2nd Parameter	1	1	0	-	XE6	XE5	XE4	XE3	XE2	XE1	XE0	

NOTE: "-" Don't care

Description

This command is used to define area of frame memory where MCU can access.
This command makes no change on the other driver status.
The value of XS [6:0] and XE [6:0] are referred when RAMWR command comes.
Each value represents one column line in the Frame Memory.

(Example)

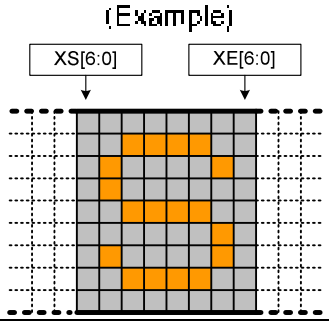

Restriction

XS [6:0] always must be equal to or less than XE [6:0]
When XS [6:0] or XE [6:0] is greater than 65h (when MV=0) or 5Fh (when MV=1), data of out of range will be ignored.
(Parameter range: 0 ≦ XS [7:0] ≦ XE [7:0] ≦ 101(65h)) : MV="0"
(Parameter range: 0 ≦ XS [7:0] ≦ XE [7:0] ≦ 95(5Fh) : MV="1"

Register Availability

Status	Availability
Normal Mode On, Idle Mode Off, Sleep Out	Yes
Normal Mode On, Idle Mode On, Sleep Out	Yes
Partial Mode On, Idle Mode Off, Sleep Out	Yes
Partial Mode On, Idle Mode On, Sleep Out	Yes
Sleep In	Yes

Default

Status	Default Value		
	XS [6:0]	XE [6:0] (MV=0)	XE [6:0] (MV=1)
Power On Sequence	00h (00d)	65h (101d)	
S/W Reset	00h (00d)	65h (101d)	5Fh (95d)
H/W Reset	00h (00d)	65h (101d)	

Flow Chart

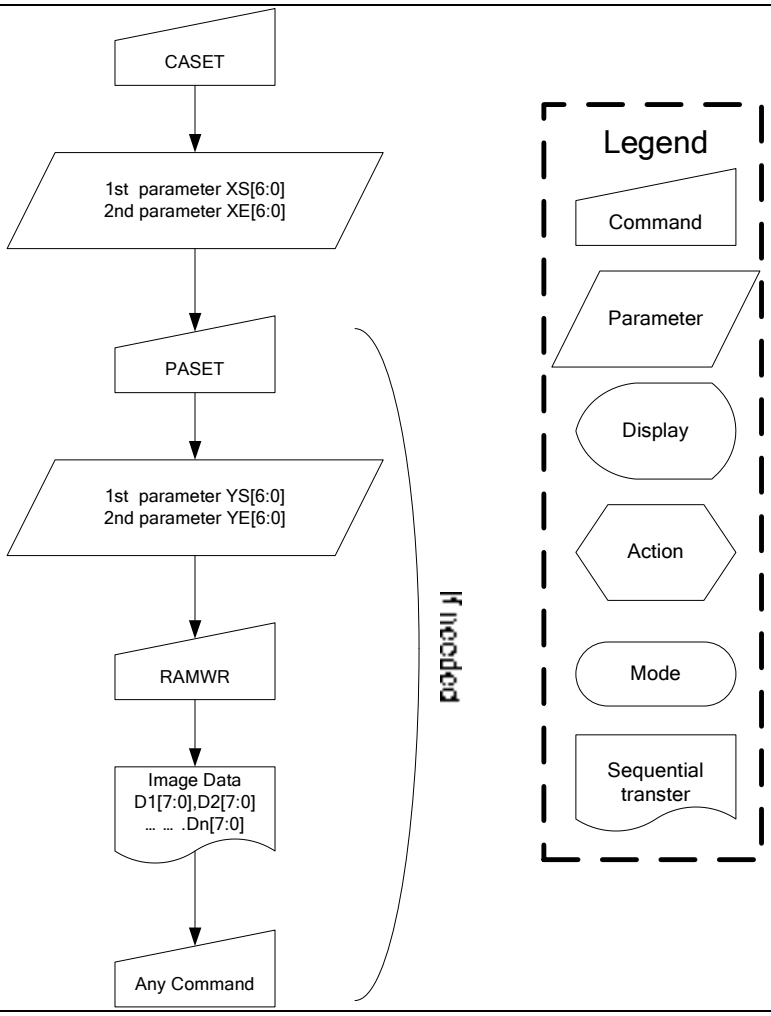
CASET
1st parameter XS[6:0]
2nd parameter XE[6:0]
PASET
1st parameter YS[6:0]
2nd parameter YE[6:0]
RAMWR
Image Data
D1[7:0],D2[7:0]
... ... .Dn[7:0]
Any Command
Repeat
Legend
Command
Parameter
Display
Action
Mode
Sequential
transter

9.1.16 RASET: Row Address Set (2BH)

Command	*A0*	*/RD*	*/WR*	*D7*	*D6*	*D5*	*D4*	*D3*	*D2*	*D1*	*D0*	*Hex*
RASET	0	1	0	0	0	1	0	1	0	1	1	**(2Bh)**
1st Parameter	1	1	0	-	YS6	YS5	YS4	YS3	YS2	YS1	YS0	
2nd Parameter	1	1	0	-	YE6	YE5	YE4	YE3	YE2	YE1	YE0	

NOTE: "-" Don't care

Description

This command is used to define area of frame memory where MCU can access.
This command makes no change on the other driver status.
The value of YS [6:0] and YE [6:0] are referred when RAMWR command comes.
Each value represents one column line in the Frame Memory.

(Example)

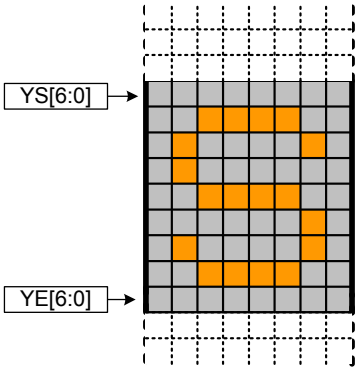

Restriction

YS [6:0] always must be equal to or less than YE [6:0]
When YS [6:0] or YE [6:0] is greater than 5Fh (when MV=0) or 65h (when MV=1), data of out of range will be ignored.
(Parameter range: 0≤YS [6:0] ≤YE [6:0] ≤95 (5Fh)) : MV = "0"
(Parameter range: 0≤YS [6:0] ≤YE [6:0] ≤101 (65h)) : MV = "1"

Register Availability

Status	Availability
Normal Mode On, Idle Mode Off, Sleep Out	Yes
Normal Mode On, Idle Mode On, Sleep Out	Yes
Partial Mode On, Idle Mode Off, Sleep Out	Yes
Partial Mode On, Idle Mode On, Sleep Out	Yes
Sleep In	Yes

Default

Status	Default Value		
	YS [6:0]	YE [6:0] (MV=0)	YE [6:0] (MV=1)
Power On Sequence	00h (00d)	5Fh (95d)	
S/W Reset	00h (00d)	5Fh (95d)	65h (101d)
H/W Reset	00h (00d)	5Fh (95d)	

Flow Chart

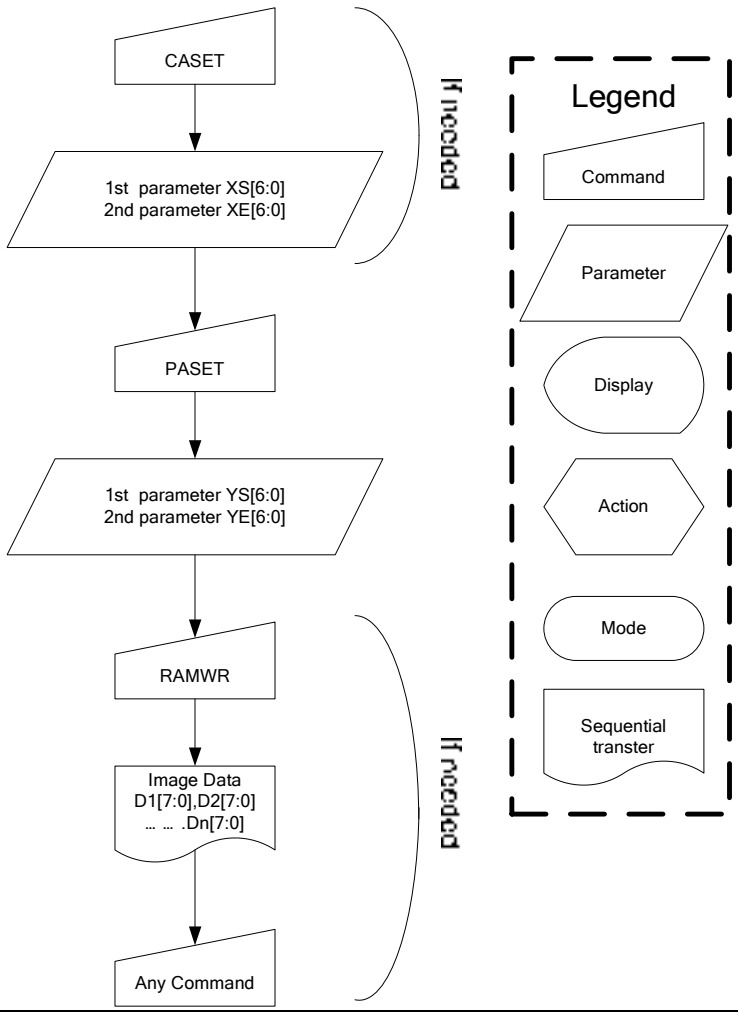
CASET
1st parameter XS[6:0]
2nd parameter XE[6:0]
If needed
PASET
1st parameter YS[6:0]
2nd parameter YE[6:0]
RAMWR
Image Data
D1[7:0],D2[7:0]
... ... .Dn[7:0]
If needed
Any Command
Legend
Command
Parameter
Display
Action
Mode
Sequential transter

9.1.17 RAMWR: Memory Write (2CH)

Command	*A0*	*/RD*	*/WR*	*D7*	*D6*	*D5*	*D4*	*D3*	*D2*	*D1*	*D0*	*Hex*
RAMWR	0	1	0	0	0	1	0	1	1	0	0	**(2Ch)**
Write Data 1 D1[7:0]	1	1	0	D7	D6	D5	D4	D3	D2	D1	D0	**-**
:	1	1	0	:	:	:	:	:	:	:	:	**-**
Write Data n Dn[7:0]	1	1	0	D7	D6	D5	D4	D3	D2	D1	D0	**-**

Description	This command is used to transfer data MCU to frame memory. This command makes no change to the other driver status. When this command is accepted, the column register and the row register are reset to the Start Column/Start Row positions. The Start Column/Start Row positions are different in accordance with MADCTR setting. Then D [7:0] is stored in frame memory and the column register and the row register incremented as in Figure 7.3. Frame Write can be canceled by sending any other command.
Restriction	In all color modes, there is no restriction on length of parameters.
Register Availability	

Status	Availability
Normal Mode On, Idle Mode Off, Sleep Out	Yes
Normal Mode On, Idle Mode On, Sleep Out	Yes
Partial Mode On, Idle Mode Off, Sleep Out	Yes
Partial Mode On, Idle Mode On, Sleep Out	Yes
Sleep In	Yes

Default

Status	Default Value
Power On Sequence	Contents of memory is set randomly
S/W Reset	Contents of memory is remained
H/W Reset	Contents of memory is remained

Flow Chart

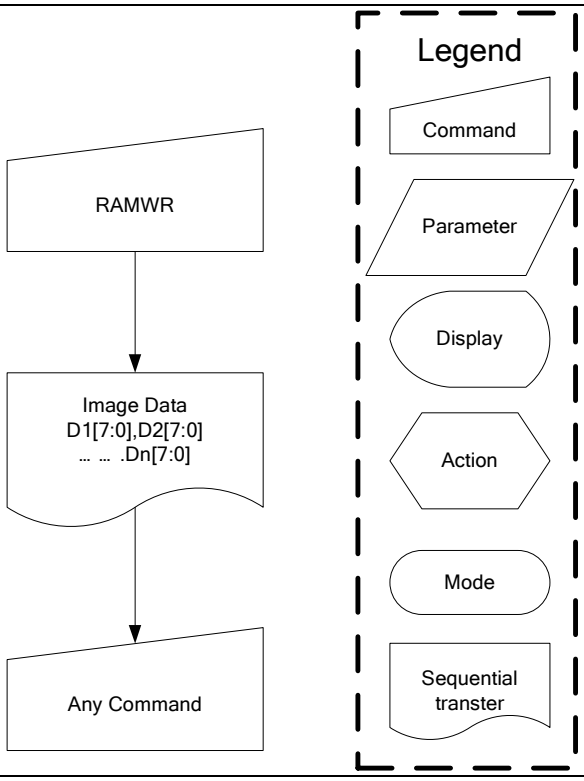
RAMWR
Image Data
D1[7:0],D2[7:0]
... ... .Dn[7:0]
Any Command
Legend
Command
Parameter
Display
Action
Mode
Sequential
transter

9.1.18 RAMRD : Memeory Read (2EH)

Command	*A0*	*/RD*	*/WR*	*D7*	*D6*	*D5*	*D4*	*D3*	*D2*	*D1*	*D0*	*Hex*
RAMRD	0	1	0	0	0	1	0	1	1	0	0	**(2Eh)**
Dummy Read	1	0	1	x	x	x	x	x	x	x	x	**x**
Read Data 1 D1[7:0]	1	0	1	D7	D6	D5	D4	D3	D2	D1	D0	**00H ~ FFH**
…	1	0	1	Dx7	Dx6	Dx5	Dx4	Dx3	Dx2	Dx1	Dx0	**00H ~ FFH**
Read Data n Dn[7:0]	1	0	1	Dn7	Dn6	Dn5	Dn4	Dn3	Dn2	Dn1	Dn0	**00H ~ FFH**

Description	This command is used to transfer data from frame memory to MCU. When this command is accepted, the column register and the page register are reset to the Start Column/Start Page positions. The Start Column/Start Page positions are different in accordance with MADCTR setting. Then D[7:0] is read back from the frame memory and the column register and the page register incremented. Frame Read can be stopped by sending any other command.
Restriction	In all color modes, the Frame Read is always 16bit so there is no restriction on length of parameters. Note: Memory Read is only possible via the Parallel Interface.
Register Availability	

Status	Availability
Normal Mode On, Idle Mode Off, Sleep Out	Yes
Normal Mode On, Idle Mode On, Sleep Out	Yes
Partial Mode On, Idle Mode Off, Sleep Out	Yes
Partial Mode On, Idle Mode On, Sleep Out	Yes
Sleep In or Booster Off	Yes

Default

Status	Default Value
Power On Sequence	Contents of memory is set randomly
S/W Reset	Contents of memory is not cleared
H/W Reset	Contents of memory is not cleared

Flow Chart	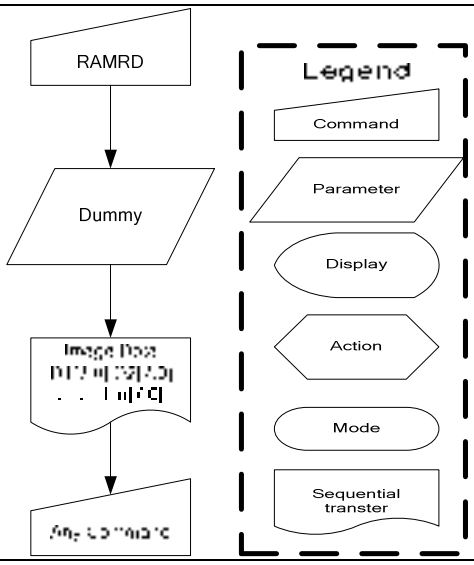 RAMRD Dummy Legend Command Parameter Display Action Mode Sequential transter

9.1.19 PTLAR: Partial Area (30H)

Command	*A0*	*/RD*	*/WR*	*D7*	*D6*	*D5*	*D4*	*D3*	*D2*	*D1*	*D0*	*Hex*
PTLAR	0	1	0	0	0	1	1	0	0	0	0	**(30h)**
1st Parameter	1	1	0	-	PS6	PS5	PS4	PS3	PS2	PS1	PS0	-
2nd Parameter	1	1	0	-	PE6	PE5	PE4	PE3	PE2	PE1	PE0	-

NOTE: "-" Don't care

Description

This command defines the partial mode's display area. There are 2 parameters associated with this command, the first defines the Start Line (PS) and the second the End Line (PE), as illustrated in the figures below. PSL and PEL refer to the Frame Memory Line counter.

If End Line > Start Line when MADCTR ML=0:

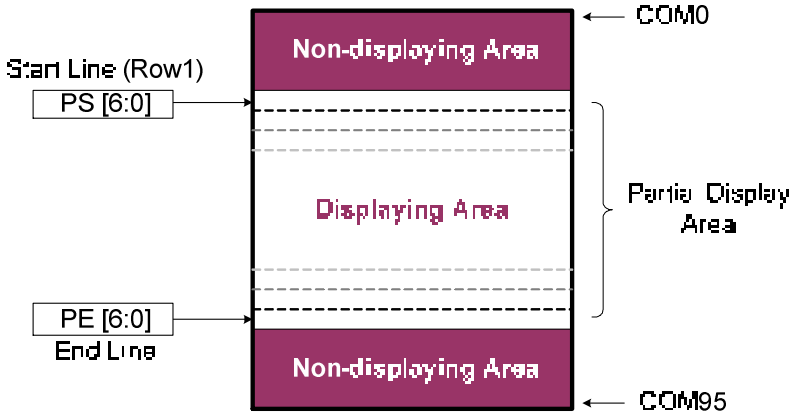

If End Line > Start Line when MADCTR ML=1:

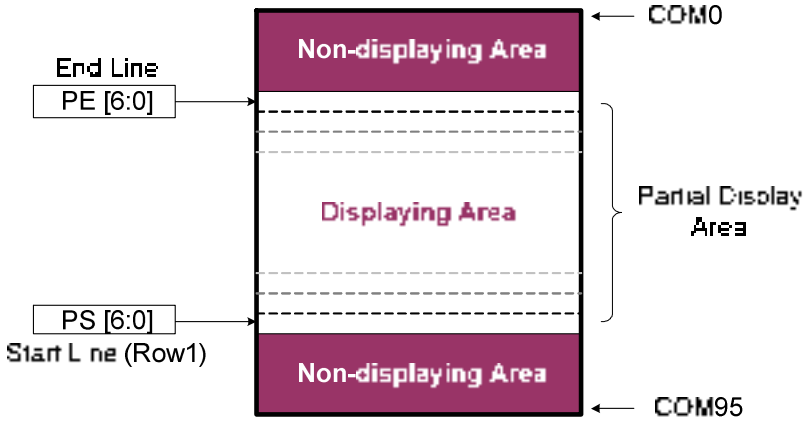

If End Line < Start Line when MADCTR ML=0:

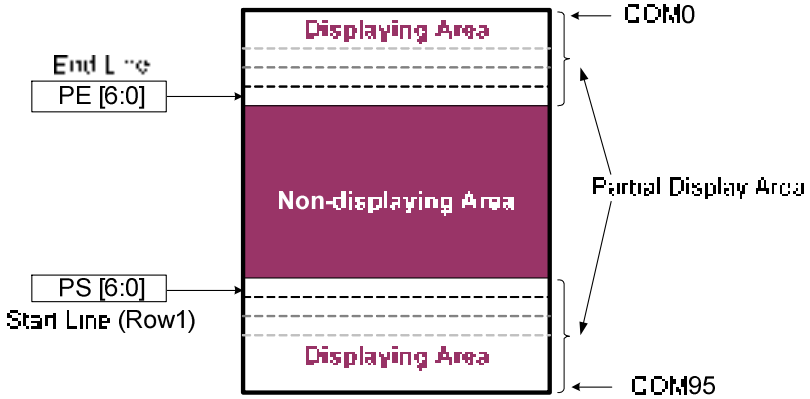

* Row1: Frame memory row address 1.

If End Line = Start Line then the Partial Area will be one line deep.

Restriction

PSL[6:0] and PEL[6:0] is based on line unit.

PSL[6:0]=00h, 01h, 02h, 03h, … , 5Fh

	PEL[6:0]= 00h, 01h, 02h, 03h, … , 5Fh
Register Availability	

Status	Availability
Normal Mode On, Idle Mode Off, Sleep Out	Yes
Normal Mode On, Idle Mode On, Sleep Out	Yes
Partial Mode On, Idle Mode Off, Sleep Out	Yes
Partial Mode On, Idle Mode On, Sleep Out	Yes
Sleep In	Yes

Default

Status	Default Value	
	PSL [6:0]	PEL [6:0]
Power On Sequence	00h (00d)	5Fh (95d)
S/W Reset	00h (00d)	5Fh (95d)
H/W Reset	00h (00d)	5Fh (95d)

Flow Chart

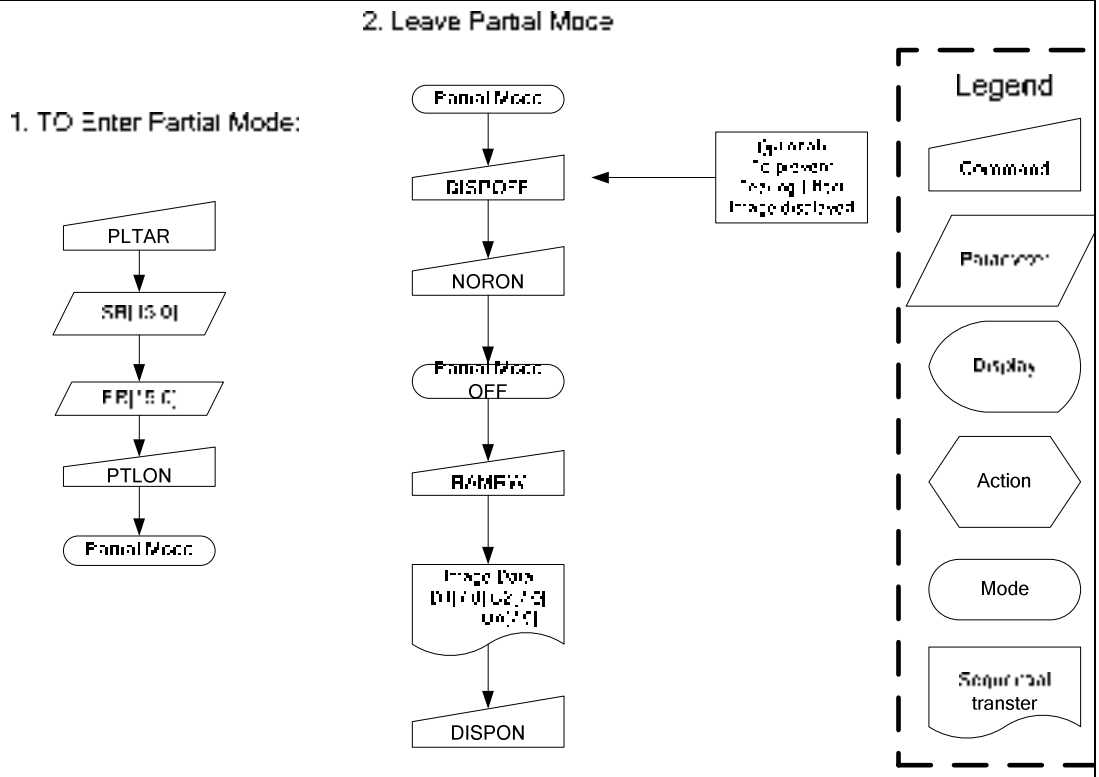

9.1.20 SCRLAR: Scroll Area (33H)

Command	*A0*	*/RD*	*/WR*	*D7*	*D6*	*D5*	*D4*	*D3*	*D2*	*D1*	*D0*	*Hex*
SCRLAR	0	1	0	0	0	1	1	0	0	1	1	**(33h)**
1st parameter	1	1	0	-	TFA6	TFA5	TFA4	TFA3	TFA2	TFA1	TFA0	-
2nd parameter	1	1	0	-	VSA6	VSA5	VSA4	VSA3	VSA2	VSA1	VSA0	-
3rd parameter	1	1	0	-	BFA6	BFA5	BFA4	BFA3	BFA2	BFA1	BFA0	-

NOTE: "-" Don't care

Description

This command just defines the Vertical Scrolling Area of the display and not performs vertical scroll.
When MADCTR BL=0
The 1st parameter TFA [6:0] describes the Top Fixed Area (in No. of lines from Top of the Frame Memory and Display).
The 2nd parameter VSA [6:0] describes the height of the Vertical Scrolling Area (in No. of lines of the Frame Memory [not the display] from the Vertical Scrolling Start Address) The first line appears immediately after the bottom most line of the Top Fixed Area.
The 3rd parameter BFA [6:0] describes the Bottom Fixed Area (in No. of lines from Bottom of the Frame Memory and Display).
TFA, VSA and BFA refer to the Frame Memory Line Pointer.

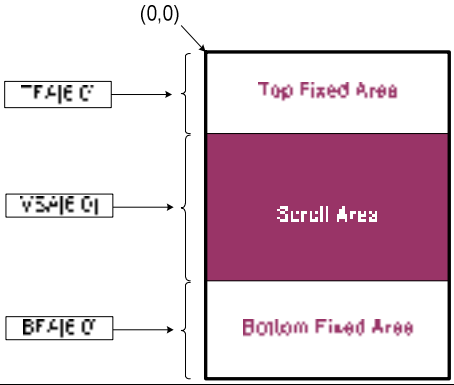

Restriction

The condition is (TFA+VSA+BFA) = 96, otherwise Scrolling mode is undefined.
In Vertical Scroll Mode, MADCTR parameter MV should be set to '0'-this only affects the Frame Memory Write.
TFA[6:0], VSA[6:0] and BFA[6:0] is based on line unit.
TFA[6:0]= 00h, 01h, 02h, 03h, … , 5Fh
VSA[6:0]= 00h, 01h, 02h, 03h, … , 5Fh
BFA[6:0]= 00h, 01h, 02h, 03h, … , 5Fh

Register Availability

Status	Availability
Normal Mode On, Idle Mode Off, Sleep Out	Yes
Normal Mode On, Idle Mode On, Sleep Out	Yes
Partial Mode On, Idle Mode Off, Sleep Out	Yes
Partial Mode On, Idle Mode On, Sleep Out	Yes
Sleep In	Yes

Default

Status	Default Value		
	TFA [6:0]	VSA [6:0]	BFA [6:0]
Power On Sequence	00h	5Fh (95d)	00h
S/W Reset	00h	5Fh (95d)	00h
H/W Reset	00h	5Fh (95d)	00h

Flow Chart

1. TO Enter Vertical Scroll Mode:

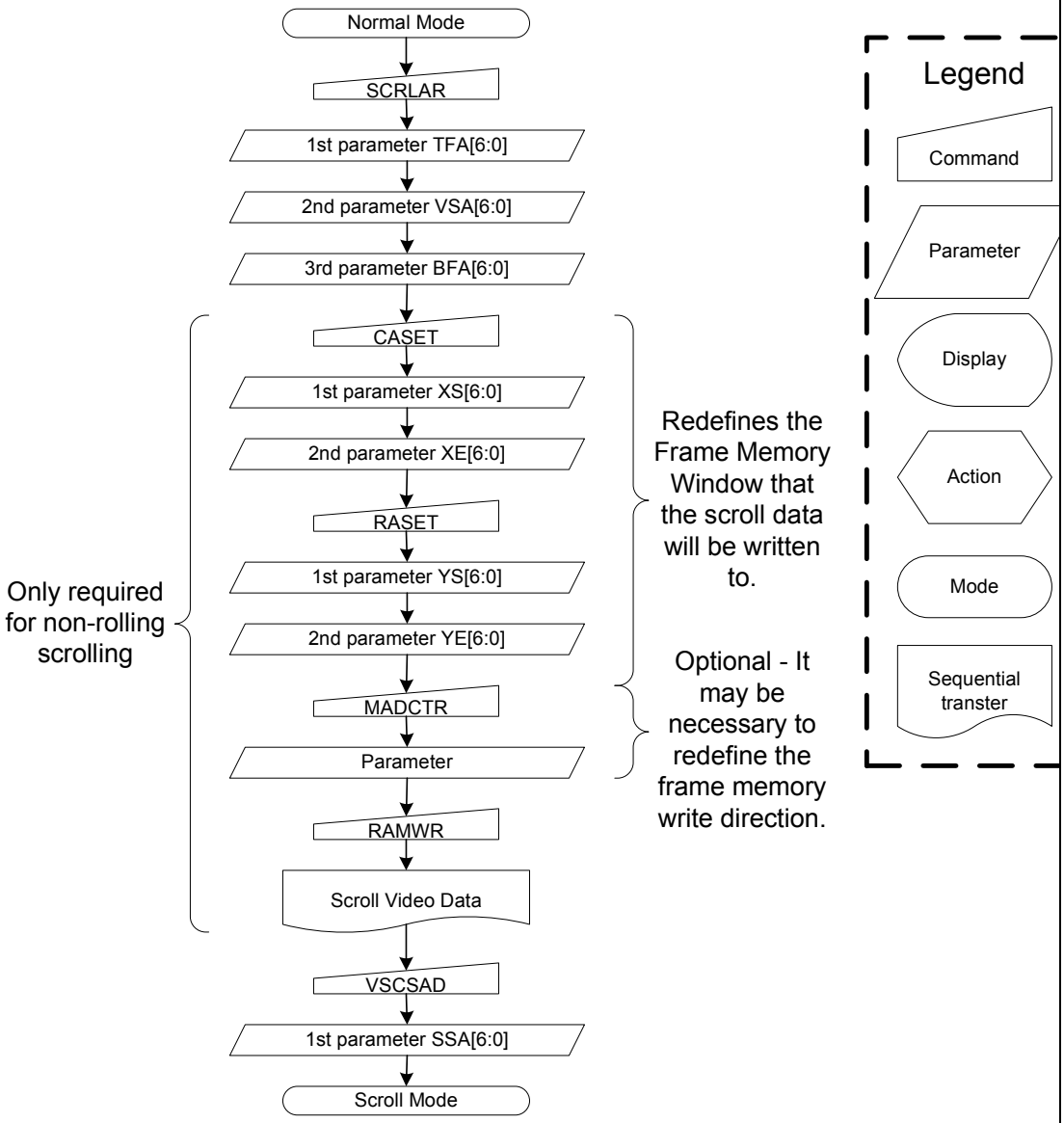

NOTE: The Frame Memory Window size must be defined correctly otherwise undesirable image will be displayed.

Flow Chart

2. Continuous Scroll:

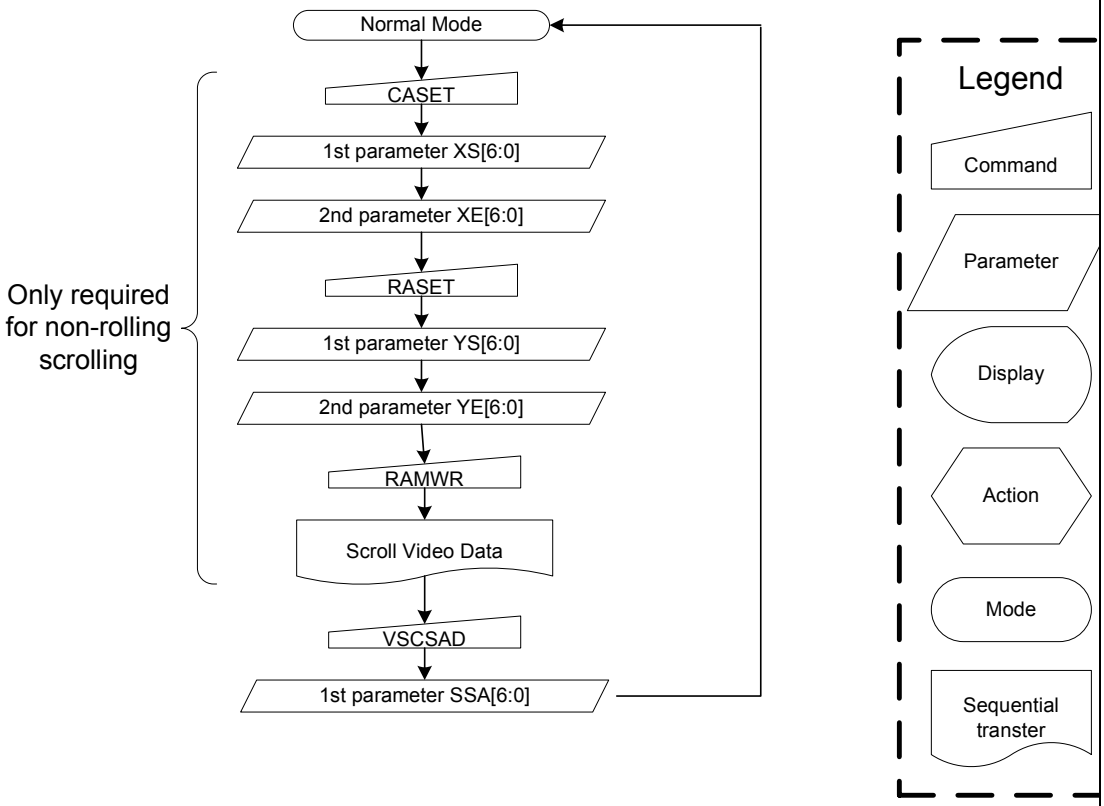

3. To Exit Vertical Scroll Mode:

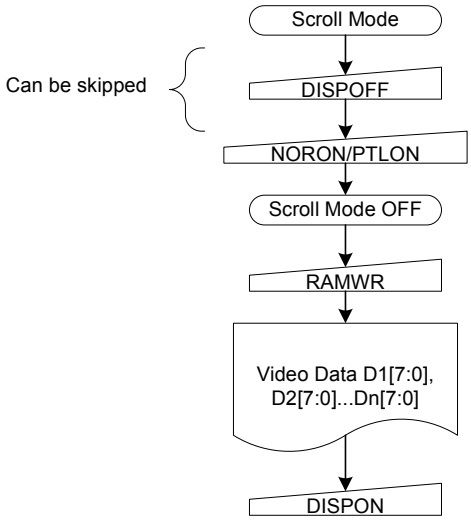

NOTE: Scroll Mode can be exit by both the Normal Display Mode On(13h) and Partial Mode On (12h) commands.

9.1.21 MADCTR: Memory Data Access Control (36H)

Command	*A0*	*/RD*	*/WR*	*D7*	*D6*	*D5*	*D4*	*D3*	*D2*	*D1*	*D0*	*Hex*
MADCTR	0	1	0	0	0	1	1	0	1	1	0	**(36h)**
Parameter	1	1	0	MY	MX	MV	ML	RGB	-	-	-	-

NOTE: "-" Don't care

Description

This command defines read/write scanning direction of frame memory.
This command makes no change on the other driver status.
Note: ML affects to Partial Area (30h), Vertical Scrolling Definition (33h), Vertical Scrolling Start address (37h), Partial On (12h) commands

Bit Assignment

Bit	NAME	DESCRIPTION
MY	ROW ADDRESS ORDER	These 3bits controls MCU to memory write/read direction. (See Section 7.3.2 "MCU to memory write/read direction")
MX	COLUMN ADDRESS ORDER	
MV	ROW/COLUMN ORDER	
ML	LINE ADDRESS ORDER	LCD refresh direction control
RGB	RGB-BGR ORDER	Color selector switch control 0=RGB color filter panel, 1=BGR color filter panel) The contents of the frame memory are not changed.

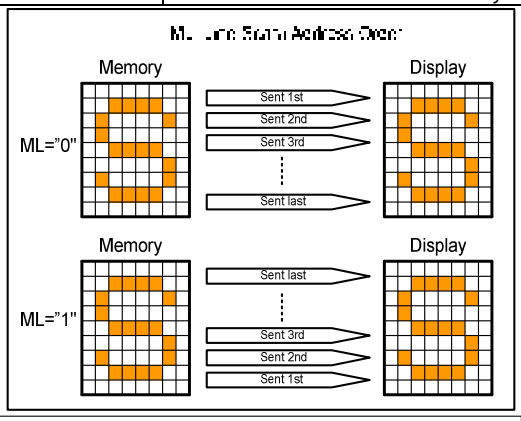

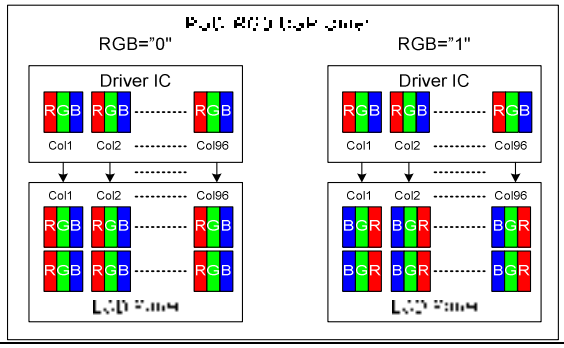

Restriction

D2, D1 and D0 of the 1st parameter are set to '000'internally.

Register Availability

Status	Availability
Normal Mode On, Idle Mode Off, Sleep Out	Yes
Normal Mode On, Idle Mode On, Sleep Out	Yes
Partial Mode On, Idle Mode Off, Sleep Out	Yes
Partial Mode On, Idle Mode On, Sleep Out	Yes
Sleep In	Yes

Default

Status	Default Value
Power On Sequence	MY=0,MX=0,MV=0,ML=0,RGB=0
S/W Reset	Not changed
H/W Reset	MY=0,MX=0,MV=0,ML=0,RGB=0

Flow Chart	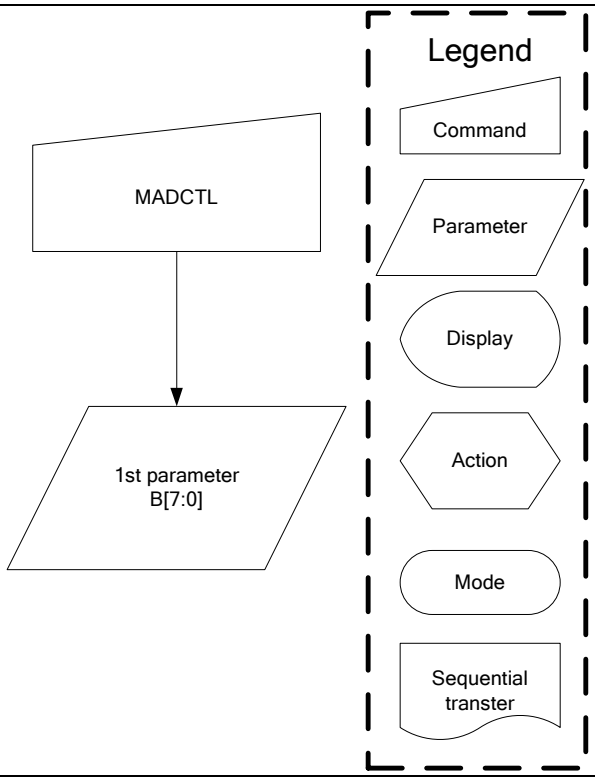 MADCTL 1st parameter B[7:0] Legend Command Parameter Display Action Mode Sequential transter

9.1.22 VSCSAD: Vertical Scroll Start Address of RAM (37H)

Command	*A0*	*/RD*	*/WR*	*D7*	*D6*	*D5*	*D4*	*D3*	*D2*	*D1*	*D0*	*Hex*
VSCSAD	0	1	0	0	0	1	1	0	1	1	1	**(37h)**
Parameter	1	1	0	-	SSA6	SSA5	SSA4	SSA3	SSA2	SSA1	SSA0	

NOTE: "-" Don't care

Description

This command is used together with Vertical Scrolling Definition (33h). These two commands describe the scrolling area and the scrolling mode.
The Vertical Scrolling Start Address command has one parameter which describes which line in the Frame Memory will be written as the first line after the last line of the Top Fixed Area on the display as illustrated below:
This command Start the scrolling.
Exit from V-scrolling mode by commands Partial mode On (12h) or Normal mode On (13h).

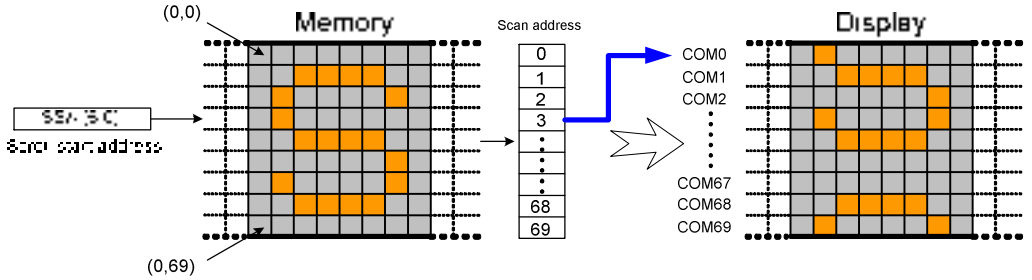

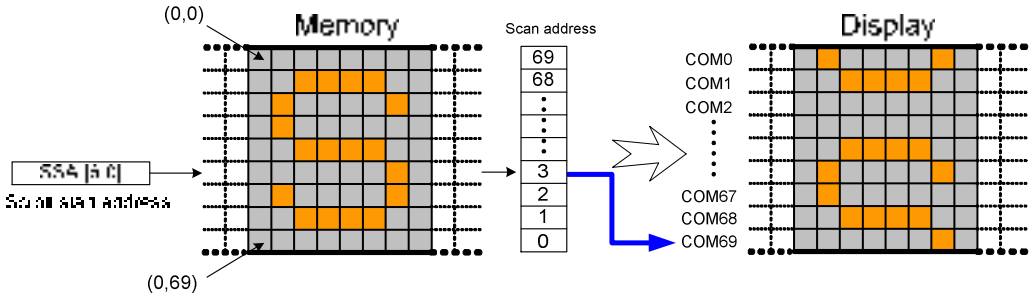

NOTE: When new Pointer position and Picture Data are sent, the result on the display will happen at the next Panel Scan to avoid tearing effect.
SSA refers to the Frame Memory line Pointer

Restriction

Since the value of the Vertical Scrolling Start Address is absolute (with reference to the Frame Memory), it must not enter the fixed area (defined by Vertical Scrolling Definition (33h)-otherwise undesirable image will be displayed on the Panel.

SSA [6:0] is based on line unit.
SSA [6:0] = 00h, 01h, 02h, 03h, … , 5Fh

Register Availability

Status	Availability
Normal Mode On, Idle Mode Off, Sleep Out	Yes
Normal Mode On, Idle Mode On, Sleep Out	Yes
Partial Mode On, Idle Mode Off, Sleep Out	No
Partial Mode On, Idle Mode On, Sleep Out	No
Sleep In	Yes

Default

Status	Default Value
Power On Sequence	00
S/W Reset	00
H/W Reset	00

Flow Chart

See Vertical Scrolling Definition (33h) description.

9.1.23 IDMOFF: Idle Mode Off (38H)

Command	*A0*	*/RD*	*/WR*	*D7*	*D6*	*D5*	*D4*	*D3*	*D2*	*D1*	*D0*	*Hex*
IDMOFF	0	1	0	0	0	1	1	1	0	0	0	**(38h)**
Parameter	No Parameter											

Description

This command is used to recover from Idle mode on.
There will be no abnormal visible effect on the display mode change transition.
In the idle off mode,
1. LCD can display maximum 65536 colors.
2. Normal frame frequency is applied.

Restriction

This command has no effect when module is already in idle off mode.

Register Availability

Status	Availability
Normal Mode On, Idle Mode Off, Sleep Out	Yes
Normal Mode On, Idle Mode On, Sleep Out	Yes
Partial Mode On, Idle Mode Off, Sleep Out	Yes
Partial Mode On, Idle Mode On, Sleep Out	Yes
Sleep In	Yes

Default

Status	Default Value
Power On Sequence	Idle mode off
S/W Reset	Idle mode off
H/W Reset	Idle mode off

Flow Chart

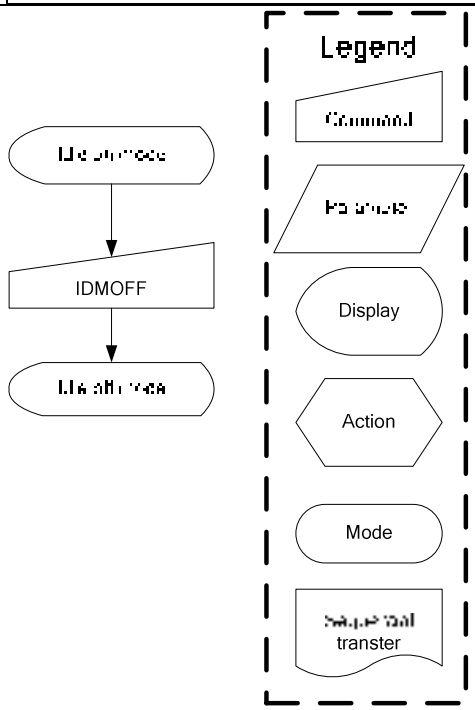

9.1.24 IDMON: Idle Mode On (39H)

Command	*A0*	*/RD*	*/WR*	*D7*	*D6*	*D5*	*D4*	*D3*	*D2*	*D1*	*D0*	*Hex*
IDMON	0	1	0	0	0	1	1	1	0	0	1	**(39h)**
Parameter	No Parameter											

Description

This command is used to enter into Idle mode on.
There will be no abnormal visible effect on the display mode change transition. In the idle on mode,
1. Color expression is reduced. The primary and the secondary colors using MSB of each R, G and B in the Frame Memory, 8 color depth data is displayed.
2. 8-Color mode frame frequency is applied.
3. Exit from IDMON by Idle Mode Off (38h) command

(Example)

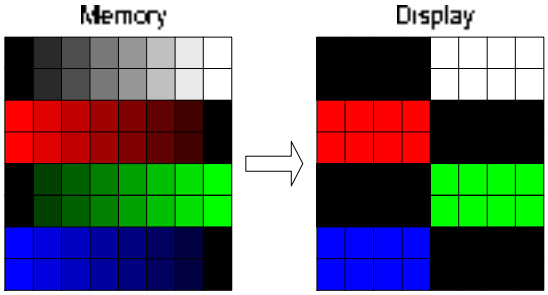

"X": don't care

Color	R_4 R_3 R_2 R_1 R_0	G_5 G_4 G_3 G_2 G_1 G_0	B_4 B_3 B_2 B_1 B_0
Black	0XXXX	0XXXXX	0XXXX
Blue	0XXXX	0XXXXX	1XXXX
Red	1XXXX	0XXXXX	0XXXX
Magenta	1XXXX	0XXXXX	1XXXX
Green	0XXXX	1XXXXX	0XXXX
Cyan	0XXXX	1XXXXX	1XXXX
Yellow	1XXXX	1XXXXX	0XXXX
White	1XXXX	1XXXXX	1XXXX

Restriction

This command has no effect when module is already in idle on mode.

Register Availability

Status	Availability
Normal Mode On, Idle Mode Off, Sleep Out	Yes
Normal Mode On, Idle Mode On, Sleep Out	Yes
Partial Mode On, Idle Mode Off, Sleep Out	Yes
Partial Mode On, Idle Mode On, Sleep Out	Yes
Sleep In	Yes

Default

Status	Default Value
Power On Sequence	Idle mode off
S/W Reset	Idle mode off
H/W Reset	Idle mode off

Flow Chart

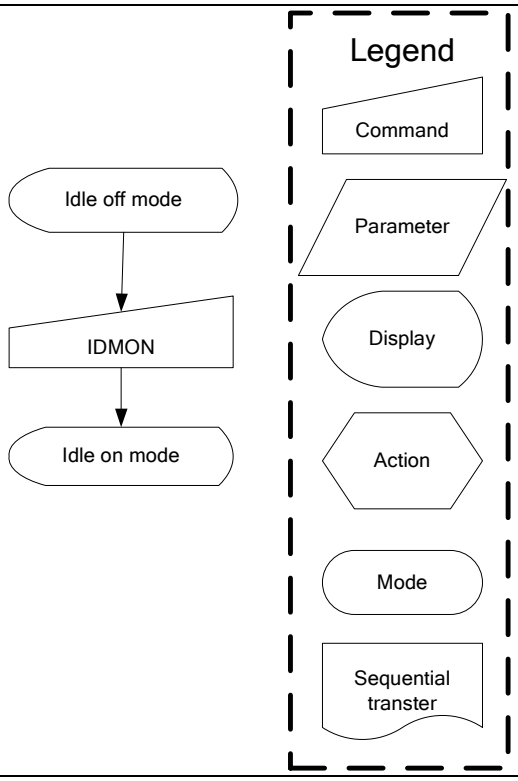
Idle off mode
IDMON
Idle on mode
Legend
Command
Parameter
Display
Action
Mode
Sequential transter

9.1.25 COLMOD: Interface Pixel Format (3AH)

Command	*A0*	*/RD*	*/WR*	*D7*	*D6*	*D5*	*D4*	*D3*	*D2*	*D1*	*D0*	*Hex*
COLMOD	0	1	0	0	0	1	1	1	0	1	0	**(3Ah)**
Parameter	1	1	0	-	-	-	-	-	P2	P1	P0	-

Description

This command is used to define the format of RGB picture data, which is to be transferred via the MCU Interface. The formats are shown in the table:

Interface Format	P2	P1	P0
Not Defined	0	0	0
Not Defined	0	0	1
8Bit/ Pixel /256	0	1	0
12Bit/Pixel /4K (Type A)	0	1	1
12Bit/Pixel /4K (Type B)	1	0	0
16Bit/Pixel/65K	1	0	1
18Bit/Pixel/262K	1	1	0
24Bit/Pixel/16M	1	1	1

Restriction

There is no visible effect until the Frame Memory is written to.

Register Availability

Status	Availability
Normal Mode On, Idle Mode Off, Sleep Out	Yes
Normal Mode On, Idle Mode On, Sleep Out	Yes
Partial Mode On, Idle Mode Off, Sleep Out	Yes
Partial Mode On, Idle Mode On, Sleep Out	Yes
Sleep In	Yes

Default

Status	Default Value
Power On Sequence	05h (16Bit/Pixel/65K)
S/W Reset	No Change
H/W Reset	05h (16Bit/Pixel/65K)

Flow Chart

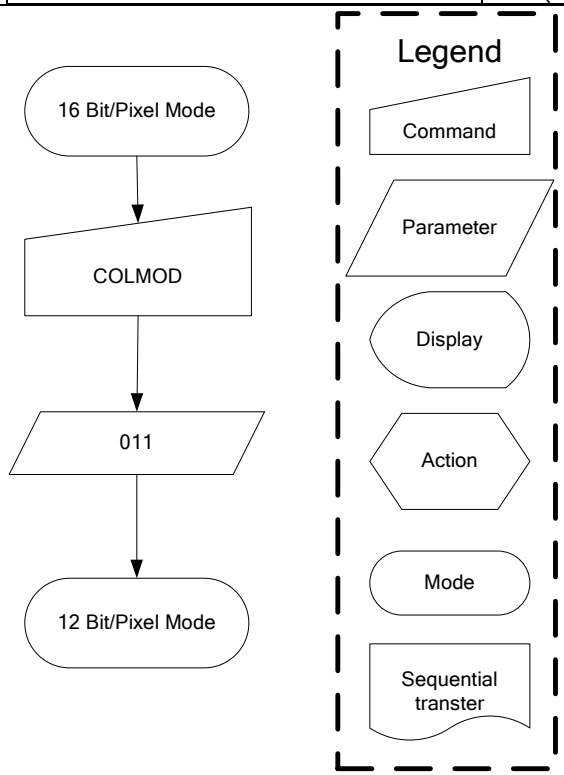

9.1.26 DutySet: Display Duty setting (B0H)

Command	*A0*	*/RD*	*/WR*	*D7*	*D6*	*D5*	*D4*	*D3*	*D2*	*D1*	*D0*	*Hex*
DutySet	0	1	0	1	0	1	1	0	0	0	0	**(B0h)**
Parameter	1	1	0	0	Du6	Du5	Du4	Du3	Du2	Du1	Du0	-

NOTE: "-" Don't care

Description

This command is used to set display duty. Command set = display duty numbers - 1.

Example:

Duty	Du6	Du5	Du4	Du3	Du2	Du1	Du0	Command set= Display duty numbers-1
Example: 1/96 duty	1	0	1	1	1	1	1	96-1=95

Restriction

Display duty must > 4 (1/4 duty)

Register Availability

Status	Availability
Normal Mode On, Idle Mode Off, Sleep Out	Yes
Normal Mode On, Idle Mode On, Sleep Out	Yes
Partial Mode On, Idle Mode Off, Sleep Out	Yes
Partial Mode On, Idle Mode On, Sleep Out	Yes
Sleep In	Yes

Default

Status	Default Value (Du[6:0])
Power On Sequence	01011101b (5Fh)
S/W Reset	01011101b (5Fh)
H/W Reset	01011111b (5Fh)

Flow Chart

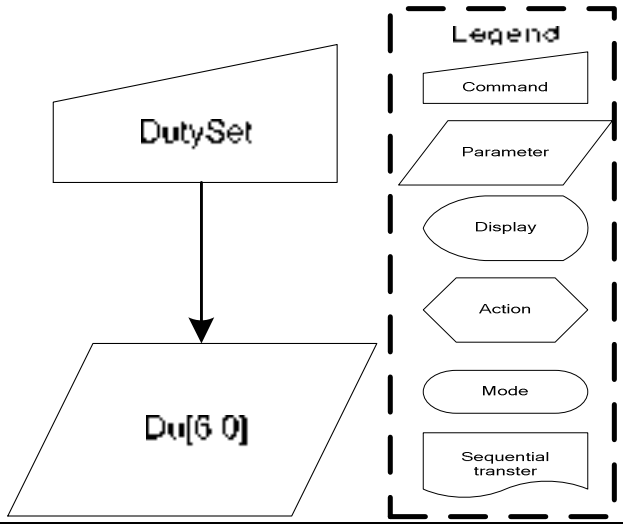

9.1.27 FirstCom: First Com. Page address (B1H)

Command	*A0*	*/RD*	*/WR*	*D7*	*D6*	*D5*	*D4*	*D3*	*D2*	*D1*	*D0*	*Hex*
FirstCom	0	1	0	1	0	1	1	0	0	0	1	**(B1h)**
Parameter	1	1	0	--	F6	F5	F4	F3	F2	F1	F0	-

NOTE: "-" Don't care

Description

This command defines the first output COM number that mapping to the RAM page address 0. For detail setting value, please see the table as below.

F6	F5	F4	F3	F2	F1	F0	Line address
0	0	0	0	:	:	0	0
0	0	0	0	:	:	1	1
0	0	0	1	:	:	0	2
0	0	0	1	:	:	1	3
:	:	:	:	:	:	:	:
1	0	1	1	1	1	1	95

Example:
If FirstCom=8, common 8 would output the data of RAM page address 0.

Restriction

Register Availability

Status	Availability
Normal Mode On, Idle Mode Off, Sleep Out	Yes
Normal Mode On, Idle Mode On, Sleep Out	Yes
Partial Mode On, Idle Mode Off, Sleep Out	Yes
Partial Mode On, Idle Mode On, Sleep Out	Yes
Sleep In	Yes

Default

Status	Default Value (F[6:0])
Power On Sequence	00h
S/W Reset	00h
H/W Reset	00h

Flow Chart

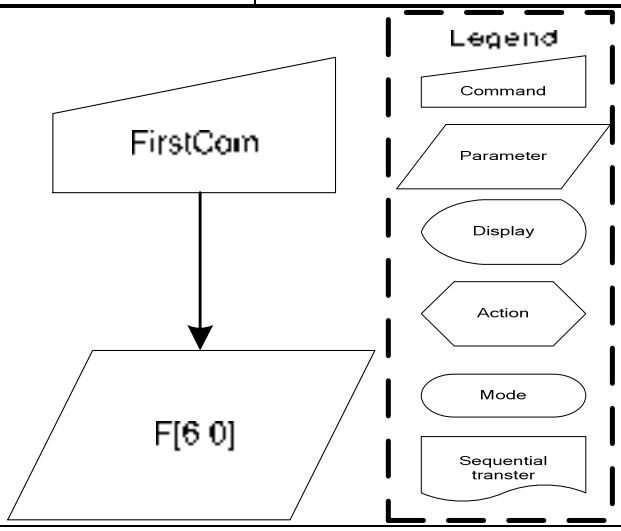

9.1.28 OscDiv: FOSC Divider (B3H)

Command	*A0*	*/RD*	*/WR*	*D7*	*D6*	*D5*	*D4*	*D3*	*D2*	*D1*	*D0*	*Hex*
OscDiv	0	1	0	1	0	1	1	0	0	1	1	**(B3h)**
Parameter	1	1	0	-	-	-	-	-	-	CLD1	CLD0	-

NOTE: "-" Don't care

Description

This command is used to specify the CL dividing ratio.
CLD1, CLD0: CL dividing ratio. They are used to change number of dividing stages of external or internal clock.

CLD1	CLD0	CL dividing ratio
0	0	Not divide
0	1	2 divisions
1	0	4 divisions
1	1	8 divisions

Restriction

Register Availability

Status	Availability
Normal Mode On, Idle Mode Off, Sleep Out	Yes
Normal Mode On, Idle Mode On, Sleep Out	Yes
Partial Mode On, Idle Mode Off, Sleep Out	Yes
Partial Mode On, Idle Mode On, Sleep Out	Yes
Sleep In	Yes

Default

Status	Default Value (CLD[0:1])
Power On Sequence	00b
S/W Reset	00b
H/W Reset	00b

Flow Chart

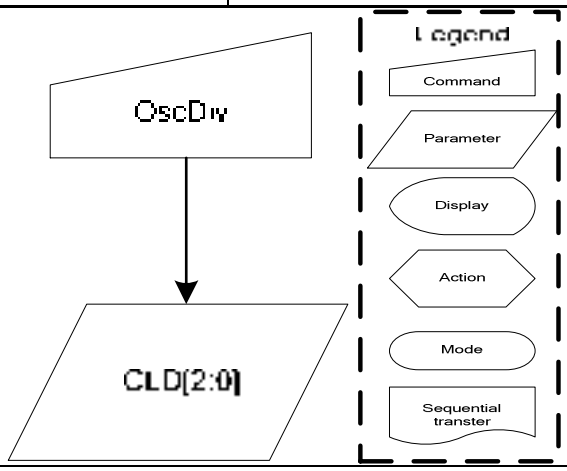

9.1.29 NLInvSet: N-Line control (B5H)

Command	*A0*	*/RD*	*/WR*	*D7*	*D6*	*D5*	*D4*	*D3*	*D2*	*D1*	*D0*	*Hex*
NLInvSet	0	1	0	1	0	1	1	0	1	0	1	**(B5h)**
Parameter	1	1	0	M	N6	N5	N4	N3	N2	N1	N0	-

NOTE: "-" Don't care

Description

This command is used to set the inverted line number with range of 2 to (duty-1) to improve display quality. When M=0, inversion occurs in every frame; when M=1, inversion is independent from frames. If N[6:0]=0, N-line inversion function is disable.
Line inversion numbers=N[6:0] +1.
Example:
If N[6:0]=7, inversion occurs per 8 line.

Restriction

Register Availability

Status	Availability
Normal Mode On, Idle Mode Off, Sleep Out	Yes
Normal Mode On, Idle Mode On, Sleep Out	Yes
Partial Mode On, Idle Mode Off, Sleep Out	Yes
Partial Mode On, Idle Mode On, Sleep Out	Yes
Sleep In	Yes

Default

Status	Default Value	
	M	N[6:0]
Power On Sequence	0b	0000000b
S/W Reset	0b	0000000b
H/W Reset	0b	0000000b

Flow Chart

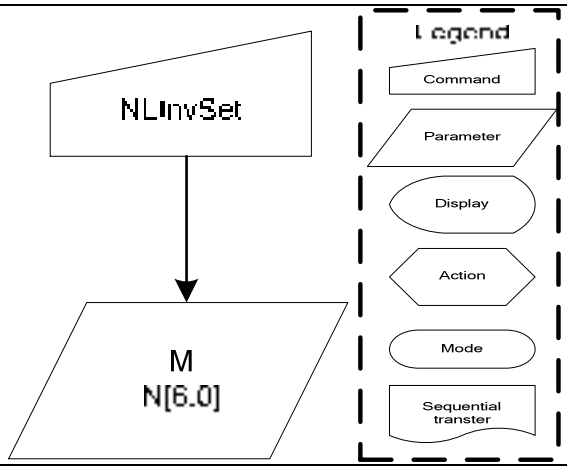

9.1.30 SEGScanDir: Seg Scan Direction for glass layout (B7H)

Command	*A0*	*/RD*	*/WR*	*D7*	*D6*	*D5*	*D4*	*D3*	*D2*	*D1*	*D0*	*Hex*
ComScanDir	0	1	0	1	0	1	1	0	1	1	1	**(B7h)**
Parameter	1	1	0	0	SMX	0	0	SBGR	0	0	0	-

NOTE: "-" Don't care

Description

	Function	0	1
SMX	Inverse the MX setting	Keep MX	Inverse MX
SBGR	Inverse the BGR setting	Keep BGR	Inverse BGR

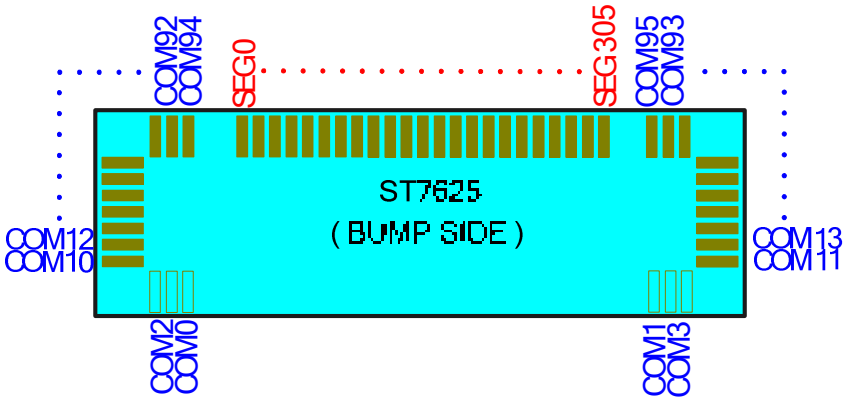

Common scan direction configuration

Restriction

Register Availability

Status	Availability
Normal Mode On, Idle Mode Off, Sleep Out	Yes
Normal Mode On, Idle Mode On, Sleep Out	Yes
Partial Mode On, Idle Mode Off, Sleep Out	Yes
Partial Mode On, Idle Mode On, Sleep Out	Yes
Sleep In	Yes

Default

Status	Default Value (CSD[1:0])
Power On Sequence	00b
S/W Reset	00b
H/W Reset	00b

Flow Chart

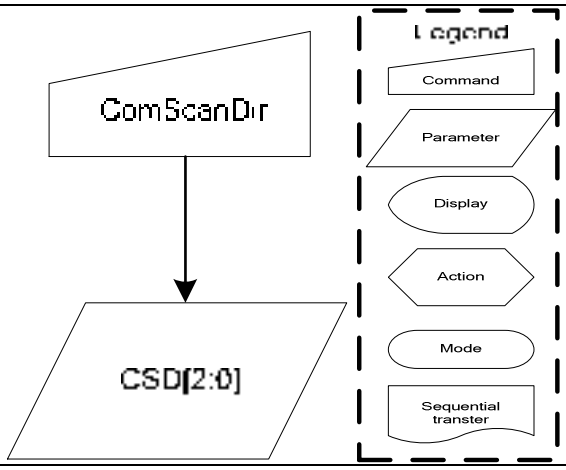

9.1.31 RMWIN: Read Modify Write control in(B8H)

Command	*A0*	*/RD*	*/WR*	*D7*	*D6*	*D5*	*D4*	*D3*	*D2*	*D1*	*D0*	*Hex*
RMWIN	0	1	0	1	0	1	1	1	0	0	0	**(B8h)**
Parameter	No Parameter											

NOTE: "-" Don't care

Description	Read modify write control IN
Restriction	Can only be used in 65K color mode.
Register Availability	

Status	Availability
Normal Mode On, Idle Mode Off, Sleep Out	Yes
Normal Mode On, Idle Mode On, Sleep Out	Yes
Partial Mode On, Idle Mode Off, Sleep Out	Yes
Partial Mode On, Idle Mode On, Sleep Out	Yes
Sleep In	Yes

Default

Status	Default Value
Power On Sequence	--
S/W Reset	--
H/W Reset	--

9.1.32 RMWOUT: Read Modify Write control out(B9H)

Command	*A0*	*/RD*	*/WR*	*D7*	*D6*	*D5*	*D4*	*D3*	*D2*	*D1*	*D0*	*Hex*
RMWOUT	0	1	0	1	0	1	1	1	0	0	1	**(B9h)**
Parameter	No Parameter											

NOTE: "-" Don't care

Description	Read modify write control OUT
Restriction	
Register Availability	

Status	Availability
Normal Mode On, Idle Mode Off, Sleep Out	Yes
Normal Mode On, Idle Mode On, Sleep Out	Yes
Partial Mode On, Idle Mode Off, Sleep Out	Yes
Partial Mode On, Idle Mode On, Sleep Out	Yes
Sleep In	Yes

Default

Status	Default Value
Power On Sequence	--
S/W Reset	--
H/W Reset	--

9.1.33 VopSet: Vop set (C0H)

Command	*A0*	*/RD*	*/WR*	*D7*	*D6*	*D5*	*D4*	*D3*	*D2*	*D1*	*D0*	*Hex*
VopSet	0	1	0	1	1	0	0	0	0	0	0	**(C0h)**
1st parameter	1	1	0	Vop7	Vop6	Vop5	Vop4	Vop3	Vop2	Vop1	Vop0	-
2nd parameter	1	1	0	-	-	-	-	-	-	-	Vop8	

NOTE: "-" Don't care

Description	The command is used to program the optimum LCD supply voltage V0.
Restriction	

Register Availability

Status	Availability
Normal Mode On, Idle Mode Off, Sleep Out	Yes
Normal Mode On, Idle Mode On, Sleep Out	Yes
Partial Mode On, Idle Mode Off, Sleep Out	Yes
Partial Mode On, Idle Mode On, Sleep Out	Yes
Sleep In	Yes

Default

Status	Default Value (Vop=12V)	
	Vop8	Vop[7:0]
Power On Sequence	0	11010010b (D2h)
S/W Reset	0	11010010b (D2h)
H/W Reset	0	11010010b (D2h)

Flow Chart

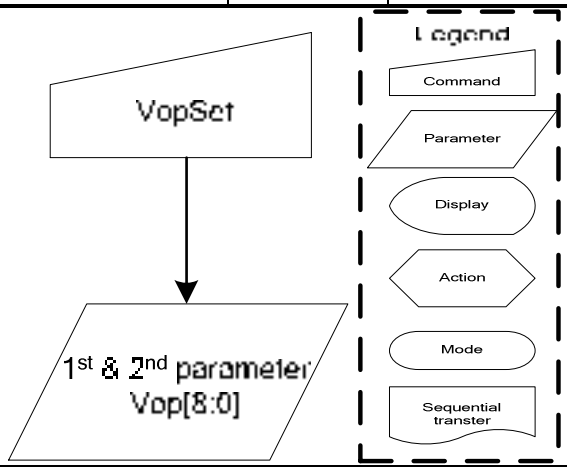

9.1.34 VopOfsetInc: Vop Increase 1 (C1H)

Command	*A0*	*/RD*	*/WR*	*D7*	*D6*	*D5*	*D4*	*D3*	*D2*	*D1*	*D0*	*Hex*
VopOfsetInc	0	1	0	1	1	0	0	0	0	0	1	**(C1h)**

NOTE: "-" Don't care

Description

With the VopOfsetInc and VopOfsetDec command the VLCD voltage and therewith the contrast of the LCD can be adjusted. This command increases the value of Vop offset register by 1.
If you set the electronic control value to 1111111, the control value is set to 0000000 after this command has been executed.

Restriction

Register Availability

Status	Availability
Normal Mode On, Idle Mode Off, Sleep Out	Yes
Normal Mode On, Idle Mode On, Sleep Out	Yes
Partial Mode On, Idle Mode Off, Sleep Out	Yes
Partial Mode On, Idle Mode On, Sleep Out	Yes
Sleep In	Yes

Default

Status	Default Value
Power On Sequence	--
S/W Reset	--
H/W Reset	--

Flow Chart

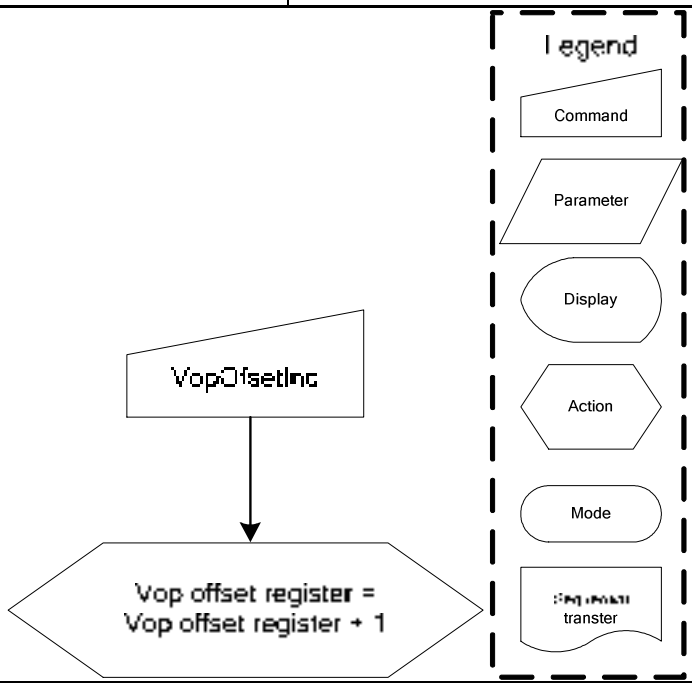

9.1.35 VopOfsetDec: Vop Decrease 1 (C2H)

Command	*A0*	*/RD*	*/WR*	*D7*	*D6*	*D5*	*D4*	*D3*	*D2*	*D1*	*D0*	*Hex*
VopOfsetDec	0	1	0	1	1	0	0	0	0	1	0	**(C2h)**

NOTE: "-" Don't care

Description

With the VopOfsetInc and VopOfsetDec command the V_{LCD} voltage and therewith the contrast of the LCD can be adjusted. This command decreases the value of Vop offset register by 1.
If you set the electronic control value to 0000000, the control value is set to 1111111 after this command has been executed.

Electronic Control Value	Decimal Equivalent	V0 Offset
0111111	63	+2520 mV
0111110	62	+2480 mV
0111101	61	+2440 mV
…	…	…
0000010	2	+80 mV
0000001	1	+40 mV
0000000	0	0 mV
1111111	-1	-40 mV
1111110	-2	-80 mV
…	…	…
1000010	-62	-2480 mV
1000001	-63	-2520 mV
1000000	-64	-2560mV

Table 9.1.1 Possible Vop[6:0] values

Restriction

Register Availability

Status	Availability
Normal Mode On, Idle Mode Off, Sleep Out	Yes
Normal Mode On, Idle Mode On, Sleep Out	Yes
Partial Mode On, Idle Mode Off, Sleep Out	Yes
Partial Mode On, Idle Mode On, Sleep Out	Yes
Sleep In	Yes

Default

Status	Default Value
Power On Sequence	--
S/W Reset	--
H/W Reset	--

Flow Chart	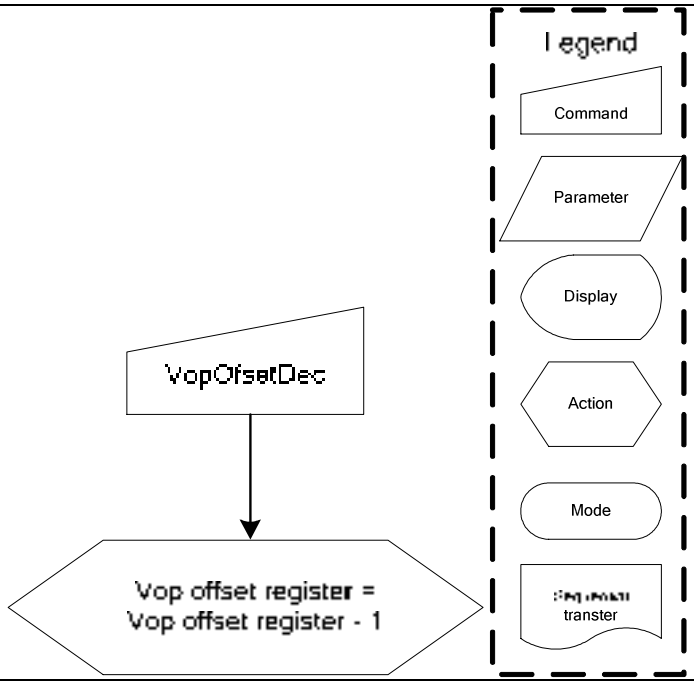 Legend Command Parameter Display Action Mode transfer VopOfsetDec Vop offset register = Vop offset register - 1

9.1.36 BiasSel: Bias Selection(C3H)

Command	*A0*	*/RD*	*/WR*	*D7*	*D6*	*D5*	*D4*	*D3*	*D2*	*D1*	*D0*	*Hex*
BiasSel	0	1	0	1	1	0	0	0	0	1	1	**(C3h)**
Parameter	1	1	0	-	-	-	-	-	Bias2	Bias1	Bias0	-

NOTE: "-" Don't care

Description

Select LCD bias ratio of the voltage required for driving the LCD.

Bais2	Bais1	Bais0	LCD bias
0	0	0	1/12
0	0	1	1/11
0	1	0	1/10
0	1	1	1/9
1	0	0	1/8
1	0	1	1/7
1	1	0	1/6
1	1	1	1/5

Restriction

Register Availability

Status	Availability
Normal Mode On, Idle Mode Off, Sleep Out	Yes
Normal Mode On, Idle Mode On, Sleep Out	Yes
Partial Mode On, Idle Mode Off, Sleep Out	Yes
Partial Mode On, Idle Mode On, Sleep Out	Yes
Sleep In	Yes

Default

Status	Default Value (Bias[2:0])
Power On Sequence	110b
S/W Reset	110b
H/W Reset	110b

Flow Chart

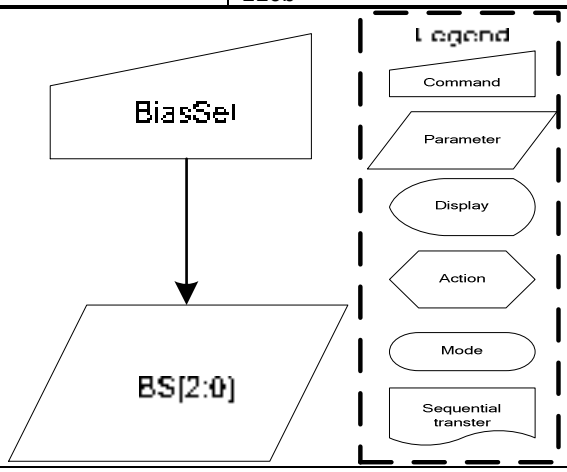

9.1.37 BstPmpXSel: Booster Set (C4H)

Command	*A0*	*/RD*	*/WR*	*D7*	*D6*	*D5*	*D4*	*D3*	*D2*	*D1*	*D0*	*Hex*
BstPmpXSel	0	1	0	1	1	0	0	0	1	0	0	**(C4h)**
Parameter	1	1	0	-	-	-	-	-	BST2	BST 1	BST0	-

NOTE: "-" Don't care

Description

Booster setting

BST2	BST1	BST0	
0	0	0	x1 boosting circuit (Booster off)
0	0	1	x2 boosting circuit
0	1	0	x3 boosting circuit
0	1	1	x4 boosting circuit
1	0	0	x5 boosting circuit
1	0	1	x6 boosting circuit
1	1	0	x7 boosting circuit
1	1	1	x8 boosting circuit

Restriction

Register Availability

Status	Availability
Normal Mode On, Idle Mode Off, Sleep Out	Yes
Normal Mode On, Idle Mode On, Sleep Out	Yes
Partial Mode On, Idle Mode Off, Sleep Out	Yes
Partial Mode On, Idle Mode On, Sleep Out	Yes
Sleep In	Yes

Default

Status	Default Value (BST[2:0])
Power On Sequence	111b
S/W Reset	111b
H/W Reset	111b

Flow Chart	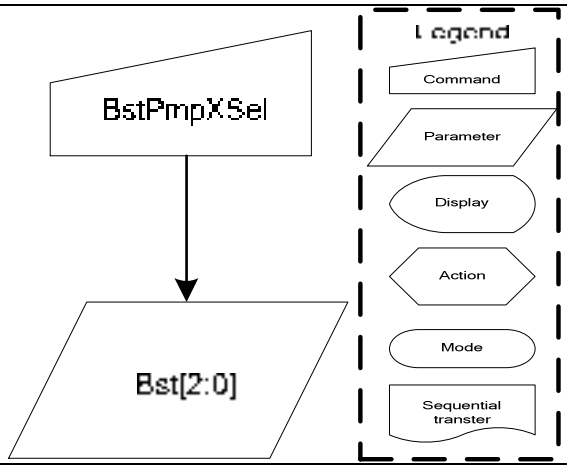 BstPmpXSel Bst[2:0] Legend Command Parameter Display Action Mode Sequential transter

9.1.38 BstEffSel: Booster Efficiency selection (C5H)

Command	*A0*	*/RD*	*/WR*	*D7*	*D6*	*D5*	*D4*	*D3*	*D2*	*D1*	*D0*	*Hex*
BstEffSel	0	1	0	1	1	0	0	0	1	0	1	**(C5h)**
Parameter	1	1	0	-	-	-	-	-	-	BTF1	BTF0	-

NOTE: "-" Don't care

Description

Booster Efficiency set

BTF1	BTF0	Frequency (Hz)
0	0	Level 1
0	1	Level 2 (default)
1	0	Level 3

By Booster Stages (2X, 3X, 4X, 5X, 6X, 7X, 8X) and Booster Efficiency (Level1~3) commands, we could easily set the best Booster performance with suitable current consumption. If the Booster Efficiency is set to higher level (level3 is higher than level1). The Boost Efficiency is better than lower level, and it needs a few more power consumption current.

Restriction

Register Availability

Status	Availability
Normal Mode On, Idle Mode Off, Sleep Out	Yes
Normal Mode On, Idle Mode On, Sleep Out	Yes
Partial Mode On, Idle Mode Off, Sleep Out	Yes
Partial Mode On, Idle Mode On, Sleep Out	Yes
Sleep In	Yes

Default

Status	Default Value (BTF[1:0])
Power On Sequence	01b
S/W Reset	01b
H/W Reset	01b

Flow Chart

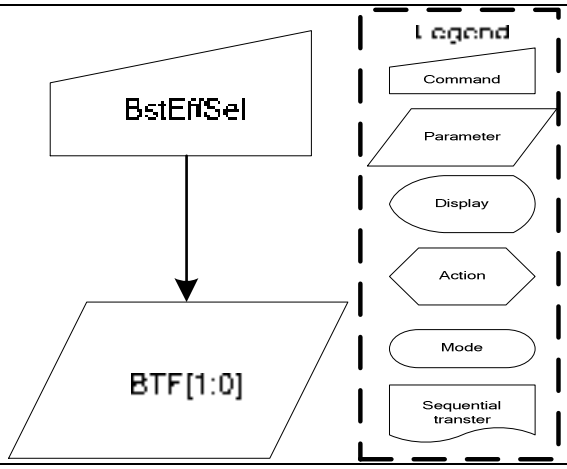

9.1.39 VopOffset: Vop offset fuse bit adjust(C7H)

Command	*A0*	*/RD*	*/WR*	*D7*	*D6*	*D5*	*D4*	*D3*	*D2*	*D1*	*D0*	*Hex*
VopOffset	0	1	0	1	1	0	0	0	1	1	1	**(C7h)**
Parameter1	1	1	0	VOS7	VOS6	VOS5	VOS4	VOS3	VOS2	VOS1	VOS0	**-**
Parameter2	1	1	0	-	-	-	-	-	-	-	VOS8	**-**

NOTE: "-" Don't care

Description: The command is used to the Vop offset for V0.

Restriction:

Register Availability:

Status	Availability
Normal Mode On, Idle Mode Off, Sleep Out	Yes
Normal Mode On, Idle Mode On, Sleep Out	Yes
Partial Mode On, Idle Mode Off, Sleep Out	Yes
Partial Mode On, Idle Mode On, Sleep Out	Yes
Sleep In	Yes

Default:

Status	Default Value	
	VOS8	VOS[7:0]
Power On Sequence	0	0
S/W Reset	0	0
H/W Reset	0	0

Flow Chart:

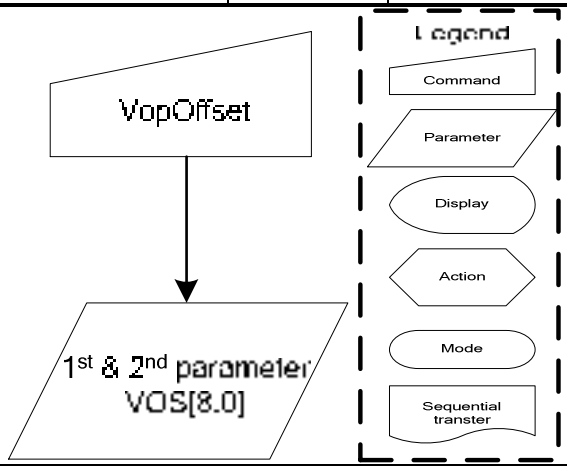

9.1.40 VgSorcSel: FVg with Bst2x control(CBH)

Command	*A0*	*/RD*	*/WR*	*D7*	*D6*	*D5*	*D4*	*D3*	*D2*	*D1*	*D0*	*Hex*
VgSorcSel	0	1	0	1	1	0	0	1	0	1	1	**(CBh)**
Parameter	1	1	0	-	-	-	-	-	-	-	2BT0	-

NOTE: "-" Don't care

Description

2BT0=0: Vg source comes from VDD2 ;
2BT0=1: Vg source comes from 2-times charge pump.

Restriction

Register Availability

Status	Availability
Normal Mode On, Idle Mode Off, Sleep Out	Yes
Normal Mode On, Idle Mode On, Sleep Out	Yes
Partial Mode On, Idle Mode Off, Sleep Out	Yes
Partial Mode On, Idle Mode On, Sleep Out	Yes
Sleep In	Yes

Default

Status	Default Value (2BT0)
Power On Sequence	1
S/W Reset	1
H/W Reset	1

Flow Chart

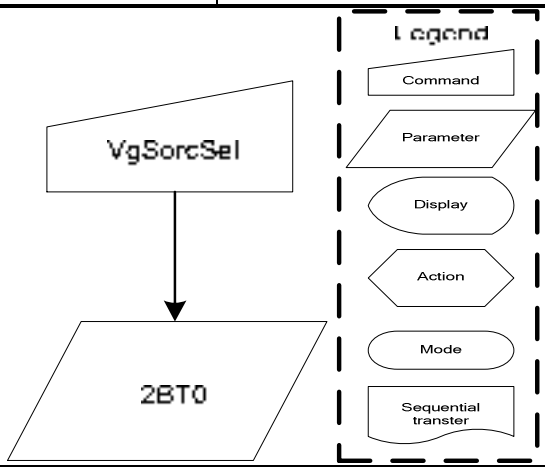

9.1.41 ANASET: Analog circuit setting (D0H)

Command	*A0*	*/RD*	*/WR*	*D7*	*D6*	*D5*	*D4*	*D3*	*D2*	*D1*	*D0*	*Hex*
AutoLoadSet	0	1	0	1	1	0	1	0	0	0	0	**(D0h)**
Parameter	1	1	0	0	0	0	1	1	1	0	1	**-**

NOTE: "-" Don't care

Description	Analog circuit setting. Such as follower selection, level shifter power selection.
Restriction	
Register Availability	

Status	Availability
Normal Mode On, Idle Mode Off, Sleep Out	Yes
Normal Mode On, Idle Mode On, Sleep Out	Yes
Partial Mode On, Idle Mode Off, Sleep Out	Yes
Partial Mode On, Idle Mode On, Sleep Out	Yes
Sleep In	Yes

Default

Status	Default Value
Power On Sequence	1Dh
S/W Reset	1Dh
H/W Reset	1Dh

Flow Chart

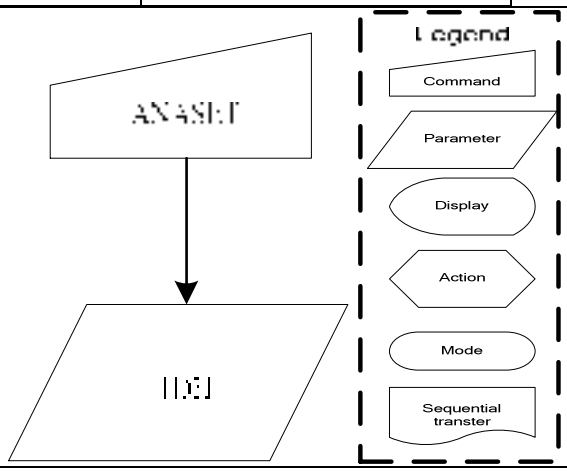

9.1.42 AutoLoadSet : Mask rom data auto re-load control(D7H)

Command	*A0*	*/RD*	*/WR*	*D7*	*D6*	*D5*	*D4*	*D3*	*D2*	*D1*	*D0*	*Hex*
AutoLoadSet	0	1	0	1	1	0	1	0	1	1	1	**(D7h)**
Parameter	1	1	0	0	0	0	ARD	1	1	1	1	**-**

NOTE: "-" Don't care

Description

Mask rom data auto re-load control
ARD : OTP auto recovery enable control, 1: Disable OTP auto recovery,
0: Enable OTP auto recovery

Restriction

Register Availability

Status	Availability
Normal Mode On, Idle Mode Off, Sleep Out	Yes
Normal Mode On, Idle Mode On, Sleep Out	Yes
Partial Mode On, Idle Mode Off, Sleep Out	Yes
Partial Mode On, Idle Mode On, Sleep Out	Yes
Sleep In	Yes

Default

Status	Default Value
	ARD
Power On Sequence	0
S/W Reset	0
H/W Reset	0

Flow Chart

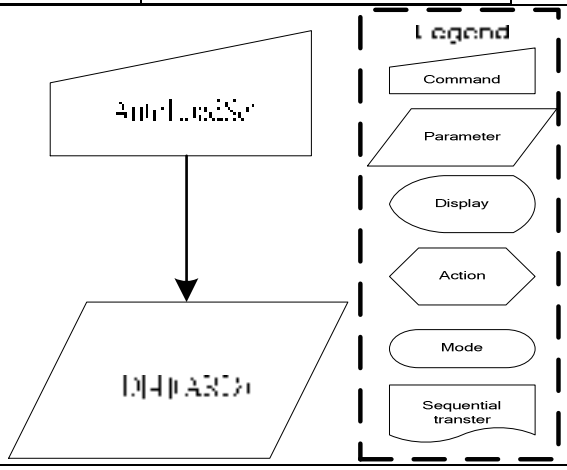

9.1.43 RDTstStatus : Read IC status(DEH)

Command	*A0*	*/RD*	*/WR*	*D7*	*D6*	*D5*	*D4*	*D3*	*D2*	*D1*	*D0*	*Hex*
RDTstStatus	0	1	0	1	1	0	1	1	1	1	0	**(DEh)**
Dummy Read	1	0	1	-	-	-	-	-	-	-	-	
Parameter	1	0	1	RD7	RD6	RD5	RD4	RD3	RD2	RD1	RD0	**-**

NOTE: "-" Don't care

Description

Read IC status.
Contect of OTP/ RDA / PWR_VOP read control
(selection Byte by StusOutByteSel[3:0] control)

Restriction

Register Availability

Status	Availability
Normal Mode On, Idle Mode Off, Sleep Out	Yes
Normal Mode On, Idle Mode On, Sleep Out	Yes
Partial Mode On, Idle Mode Off, Sleep Out	Yes
Partial Mode On, Idle Mode On, Sleep Out	Yes
Sleep In	Yes

Default

Status	Default Value
Power On Sequence	-
S/W Reset	-
H/W Reset	-

Flow Chart

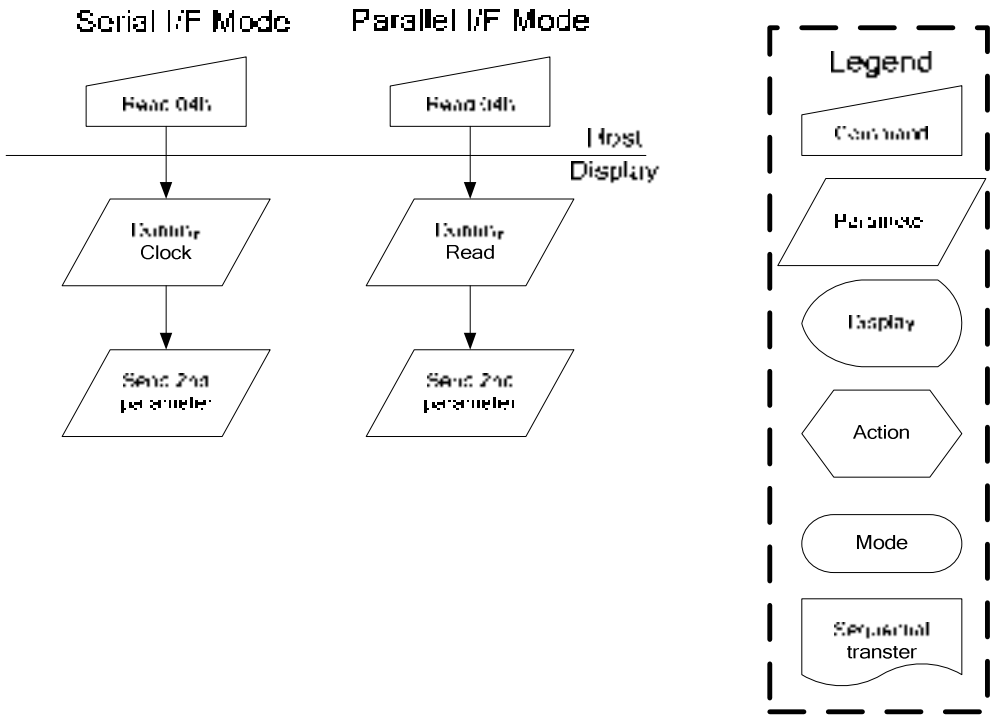

9.1.44 EPCTIN: Control OTP WR/RD(E0H)

Command	*A0*	*/RD*	*/WR*	*D7*	*D6*	*D5*	*D4*	*D3*	*D2*	*D1*	*D0*	*Hex*
EPCTIN	0	1	0	1	1	1	0	0	0	0	0	**(E0h)**
Parameter	1	1	0	0	0	EWR	0	0	0	0	0	-

NOTE: "-" Don't care

Description

EWR: when setting "1" ➔ The Write Enable of OTP will be opened.
EWR: when setting "0" ➔ The Read Enable of OTP will be opened.

Restriction

Register Availability

Status	Availability
Normal Mode On, Idle Mode Off, Sleep Out	Yes
Normal Mode On, Idle Mode On, Sleep Out	Yes
Partial Mode On, Idle Mode Off, Sleep Out	Yes
Partial Mode On, Idle Mode On, Sleep Out	Yes
Sleep In	Yes

Default

Status	Default Value (WR/XRD)
Power On Sequence	0
S/W Reset	0
H/W Reset	0

Flow Chart

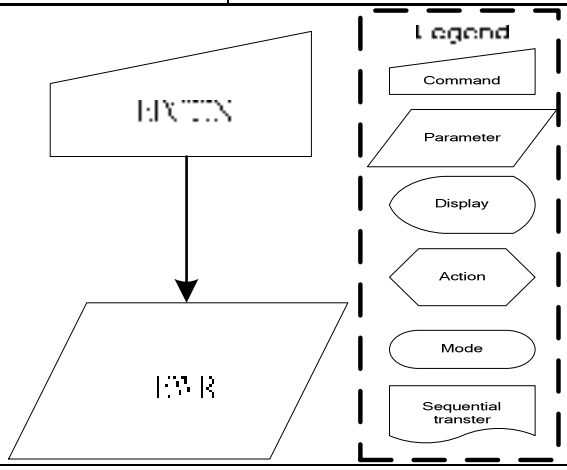

9.1.45 EPCOUT: OTP control cancel(E1H)

Command	*A0*	*/RD*	*/WR*	*D7*	*D6*	*D5*	*D4*	*D3*	*D2*	*D1*	*D0*	*Hex*
EPCOUT	0	1	0	1	1	1	0	0	0	0	1	**(E1h)**

NOTE: "-" Don't care

Description

IC exits the OTP control circuit when executing this command.

Restriction

Register Availability

Status	Availability
Normal Mode On, Idle Mode Off, Sleep Out	Yes
Normal Mode On, Idle Mode On, Sleep Out	Yes
Partial Mode On, Idle Mode Off, Sleep Out	Yes
Partial Mode On, Idle Mode On, Sleep Out	Yes
Sleep In	Yes

Default

Status	Default Value
Power On Sequence	--
S/W Reset	--
H/W Reset	--

Flow Chart

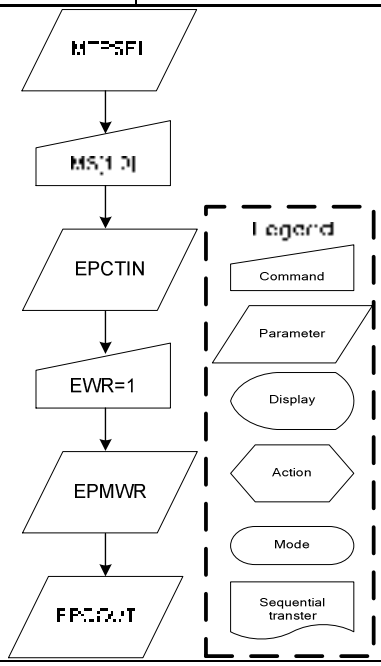

9.1.46 EPMWR: Write to OTP(E2H)

Command	*A0*	*/RD*	*/WR*	*D7*	*D6*	*D5*	*D4*	*D3*	*D2*	*D1*	*D0*	*Hex*
EPCOUT	0	1	0	1	1	1	0	0	0	1	0	**(E2h)**

NOTE: "-" Don't care

Description

IC actives trigger to start OTP programming when executing this command.

Restriction

Register Availability

Status	Availability
Normal Mode On, Idle Mode Off, Sleep Out	Yes
Normal Mode On, Idle Mode On, Sleep Out	Yes
Partial Mode On, Idle Mode Off, Sleep Out	Yes
Partial Mode On, Idle Mode On, Sleep Out	Yes
Sleep In	Yes

Default

Status	Default Value
Power On Sequence	--
S/W Reset	--
H/W Reset	--

Flow Chart

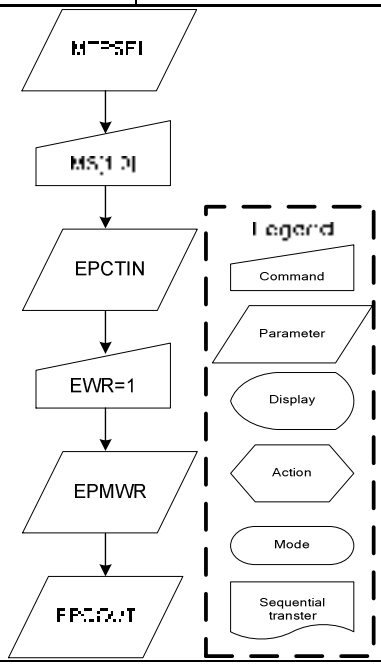

9.1.47 EPMRD: Read from OTP(E3H)

Command	*A0*	*/RD*	*/WR*	*D7*	*D6*	*D5*	*D4*	*D3*	*D2*	*D1*	*D0*	*Hex*
EPMRD	0	1	0	1	1	1	0	0	0	1	1	**(E3h)**

NOTE: "-" Don't care

Description	IC actives trigger to start OTP data download to circuit when executing this command.
Restriction	
Register Availability	

Status	Availability
Normal Mode On, Idle Mode Off, Sleep Out	Yes
Normal Mode On, Idle Mode On, Sleep Out	Yes
Partial Mode On, Idle Mode Off, Sleep Out	Yes
Partial Mode On, Idle Mode On, Sleep Out	Yes
Sleep In	Yes

Default

Status	Default Value
Power On Sequence	
S/W Reset	
H/W Reset	

Flow Chart

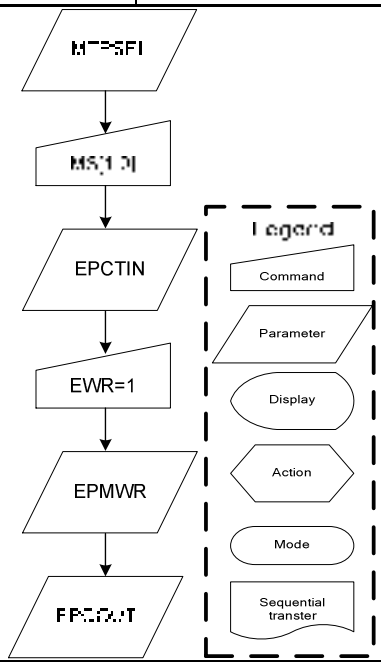

9.1.48 OTPSEL: SEL OTP(E4H)

Command	*A0*	*/RD*	*/WR*	*D7*	*D6*	*D5*	*D4*	*D3*	*D2*	*D1*	*D0*	*Hex*
OTPSEL	0	1	0	1	1	1	0	0	1	0	0	**(E4h)**
Parameter	1	1	0	MS1	MS0	0	1	1	0	0	0	-

NOTE: "-" Don't care

Description

This command defines OTP selection for EEPROM control. Please see the table as below:

MS1	MS0	Mode
0	0	Disable
0	1	OTP
1	0	Disable

Restriction

Register Availability

Status	Availability
Normal Mode On, Idle Mode Off, Sleep Out	Yes
Normal Mode On, Idle Mode On, Sleep Out	Yes
Partial Mode On, Idle Mode Off, Sleep Out	Yes
Partial Mode On, Idle Mode On, Sleep Out	Yes
Sleep In	Yes

Default

Status	Default Value (MS[1:0])
Power On Sequence	00
S/W Reset	00
H/W Reset	00

Flow Chart

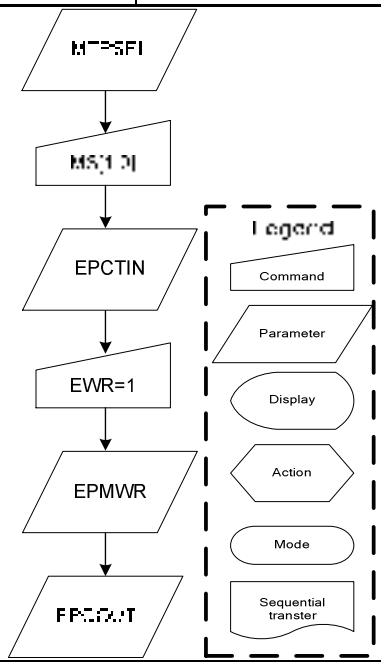

9.1.49 ROMSET: Programmable rom setting(E5H)

Command	*A0*	*/RD*	*/WR*	*D7*	*D6*	*D5*	*D4*	*D3*	*D2*	*D1*	*D0*	*Hex*
OTPSEL	0	1	0	1	1	1	0	0	1	0	1	**(E5h)**
Parameter	1	1	0	0	0	0	0	1	0	0	1	-

NOTE: "-" Don't care

Description	Set the OTP writing timing. Value 0x09 is the best value for ST7625
Restriction	
Register Availability	

Status	Availability
Normal Mode On, Idle Mode Off, Sleep Out	Yes
Normal Mode On, Idle Mode On, Sleep Out	Yes
Partial Mode On, Idle Mode Off, Sleep Out	Yes
Partial Mode On, Idle Mode On, Sleep Out	Yes
Sleep In	Yes

Default

Status	Default Value (MS[1:0])
Power On Sequence	0F
S/W Reset	0F
H/W Reset	0F

Flow Chart

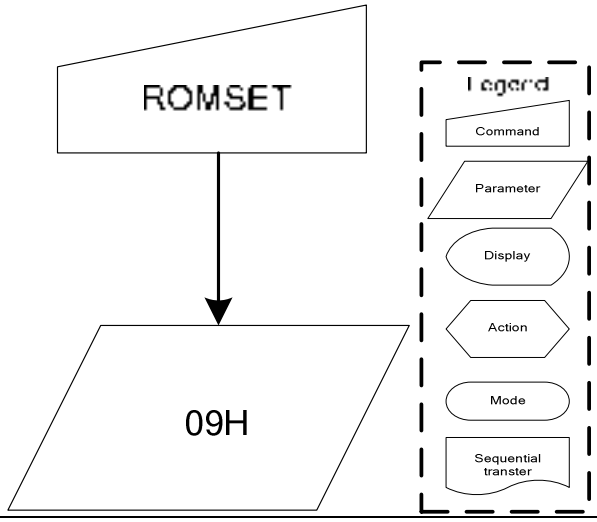

9.1.50 HPMSET : High Power Mode Setting (EBH)

	A0	RD	WR	D7	D6	D5	D4	D3	D2	D1	D0	HEX
Command	0	1	0	1	1	1	0	1	0	1	1	EBH
1st parameter	1	1	0	0	0	0	0	0	0	0	1	
2nd parameter	1	1	0	0	0	0	0	0	0	0	0	

Description

High power mode for volatage compensation.

Restriction

Register Availability

Status	Availability
Normal Mode On, Idle Mode Off, Sleep Out	Yes
Normal Mode On, Idle Mode On, Sleep Out	Yes
Partial Mode On, Idle Mode Off, Sleep Out	Yes
Partial Mode On, Idle Mode On, Sleep Out	Yes
Sleep In	Yes

Default

Status	Default Value	
	1st Paramter	2nd Parameter
Power On Sequence	00h	00h
S/W Reset	00h	00h
H/W Reset	00h	00h

Flow Chart

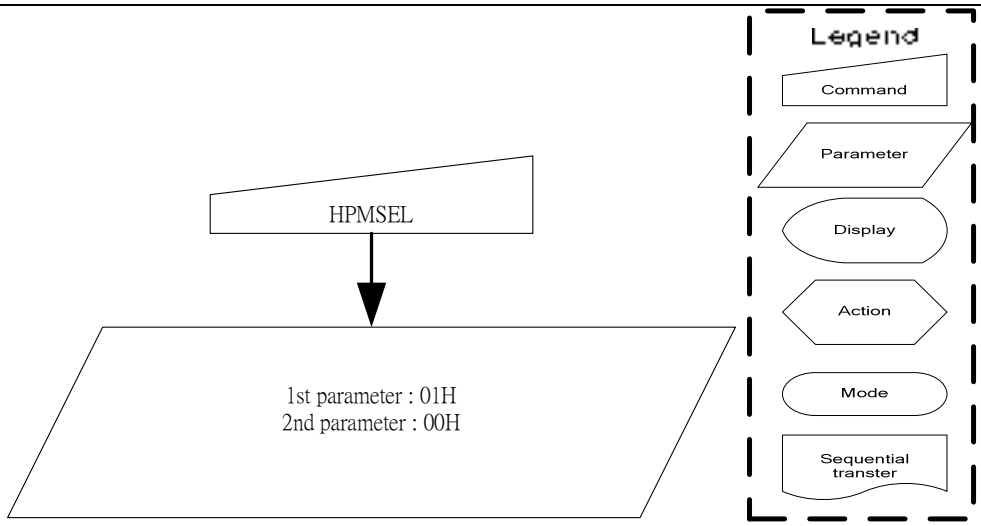

9.1.51 FRMSEL: Frame Freq. in Temp. Range (F0H)

	A0	RD	WR	D7	D6	D5	D4	D3	D2	D1	D0	HEX
Command	0	1	0	1	1	1	1	0	0	0	0	F0H
1st parameter	1	1	0	-	-	-	DIVA	FA3	FA2	FA1	FA0	Range A
2nd parameter	1	1	0	-	-	-	DIVB	FB3	FB2	FB1	FB0	Range B
3rd parameter	1	1	0	-	-	-	DIVC	FC3	FC2	FC1	FC0	Range C
4th parameter	1	1	0	-	-	-	DIVD	FD3	FD2	FD1	FD0	Range D

Description

Select Frame Freq. in normal display mode.
1st parameter : Frame freq. value set in temperature range 30(-30℃) to TA
2nd parameter : Frame freq. value set in temperature P range TA to TB
3rd parameter : Frame freq. value set in temperature range TB to TC
4th parameter : Frame freq. value set in temperature range TC to 145(90℃)
For command setting to frame rate value look-up-table, please see the following table:

DIVx	Fx[3:0] (Hex)	Frame Rate (Hz)
1	0	75
	1	76
	2	77
	3	80
	4	84
	5	88
	6	92
	7	97
	8	102
	9	108
	A	115
	B	123
	C	133
	D	144
	E	155
	F	170
0	0~F	(Frame Rate)/2

Restriction

Register Availability

Status	Availability
Normal Mode On, Idle Mode Off, Sleep Out	Yes
Normal Mode On, Idle Mode On, Sleep Out	Yes
Partial Mode On, Idle Mode Off, Sleep Out	Yes
Partial Mode On, Idle Mode On, Sleep Out	Yes
Sleep In	Yes

Default

Status	Default Value			
	FA[4:0]	FB[4:0]	FC[4:0]	FD[4:0]
Power On Sequence	06h	0Bh	0Dh	12h
S/W Reset	06h	0Bh	0Dh	12h
H/W Reset	06h	0Bh	0Dh	12h

Flow Chart

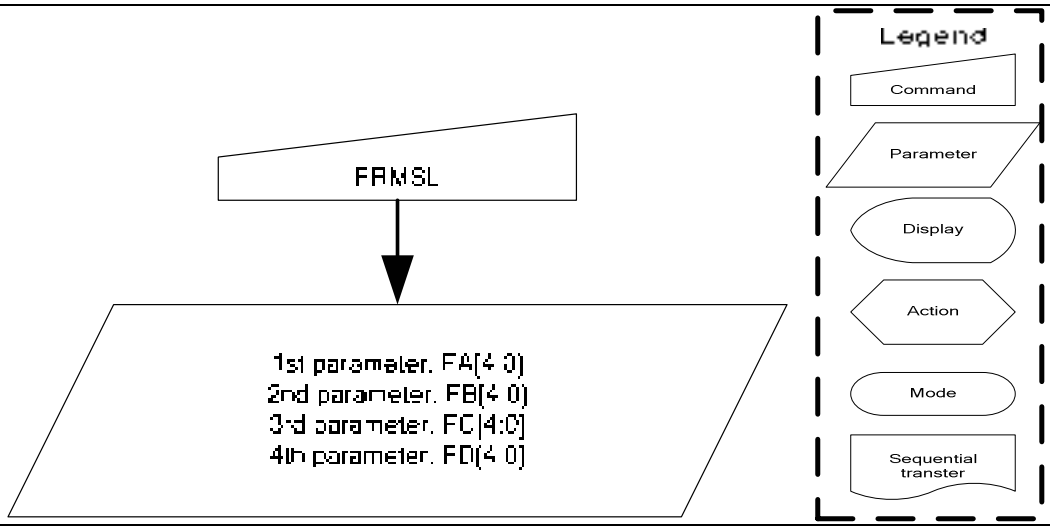

9.1.52 FRM8SEL: Frame Freq. in Temp. range (idel-8 color) (F1H)

	A0	RD	WR	D7	D6	D5	D4	D3	D2	D1	D0	HEX
Command	0	1	0	1	1	1	1	0	0	0	1	F1H
1st parameter	1	1	0	-	-	-	F8A4	F8A3	F8A2	F8A1	F8A0	Range A
2nd parameter	1	1	0	-	-	-	F8B4	F8B3	F8B2	F8B1	F8B0	Range B
3rd parameter	1	1	0	-	-	-	F8C4	F8C3	F8C2	F8C1	F8C0	Range C
4th parameter	1	1	0	-	-	-	F8D4	F8D3	F8D2	F8D1	F8D0	Range D

Description

Select Frame Freq. in normal display mode.(idle;8 color mode)
1st parameter : Frame freq. value set in TEMP range 30(-30℃) to TA
2nd parameter : Frame freq. value set in TEMP range TA to TB
3rd parameter : Frame freq. value set in TEMP range TB to TC
4th parameter : Frame freq. value set in TEMP range TC to 145(90℃)

Restriction

Register Availability

Status	Availability
Normal Mode On, Idle Mode Off, Sleep Out	Yes
Normal Mode On, Idle Mode On, Sleep Out	Yes
Partial Mode On, Idle Mode Off, Sleep Out	Yes
Partial Mode On, Idle Mode On, Sleep Out	Yes
Sleep In	Yes

Default

Status	Default Value			
	FA[4:0]	FB[4:0]	FC[4:0]	FD[4:0]
Power On Sequence	06h	0Bh	0Dh	12h
S/W Reset	06h	0Bh	0Dh	12h
H/W Reset	06h	0Bh	0Dh	12h

Flow Chart

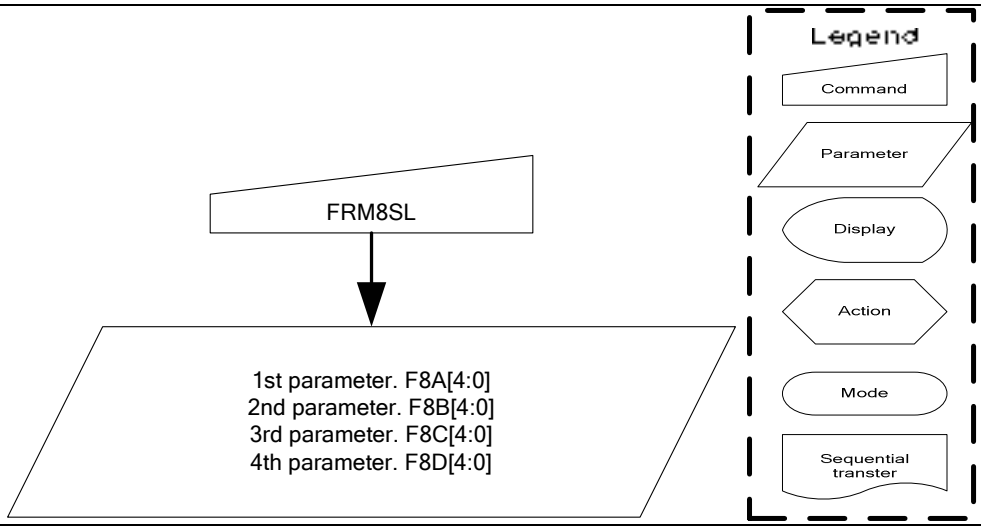
FRM8SL
1st parameter. F8A[4:0]
2nd parameter. F8B[4:0]
3rd parameter. F8C[4:0]
4th parameter. F8D[4:0]
Legend
Command
Parameter
Display
Action
Mode
Sequential transter

9.1.53 TMPRNG: Temp. range set for Frame Freq. Adj. (F2H)

	A0	RD	WR	D7	D6	D5	D4	D3	D2	D1	D0	HEX
Command	0	1	0	1	1	1	1	0	0	1	0	F2H
1st parameter	1	1	0	-	TA6	TA5	TA4	TA3	TA2	TA1	TA0	Range A
2nd parameter	1	1	0	-	TB6	TB5	TB4	TB3	TB2	TB1	TB0	Range B
3rd parameter	1	1	0	-	TC6	TC5	TC4	TC3	TC2	TC1	TC0	Range C

Description

Temp. range set for automatic frame freq. adj. operation according the current temp. value.
1st parameter: Temp. range A value set
2nd parameter: Temp. range B value set
3rd parameter: Temp. range C value set
TA/TB/TC Temperature(℃) + 40 = TA/TB/TC[6:0]
Example:
If TA wants to be set at 24℃, TA[6:0]=24+40=64(40h),

Restriction

-40℃≦TA≦TA+TH≦TB≦TB+TH≦TC≦87℃

Register Availability

Status	Availability
Normal Mode On, Idle Mode Off, Sleep Out	Yes
Normal Mode On, Idle Mode On, Sleep Out	Yes
Partial Mode On, Idle Mode Off, Sleep Out	Yes
Partial Mode On, Idle Mode On, Sleep Out	Yes
Sleep In	Yes

Default

Status	Default Value		
	TA[6:0]	TB[6:0]	TC[6:0]
Power On Sequence	1Eh	28h	32h
S/W Reset	1Eh	28h	32h
H/W Reset	1Eh	28h	32h

Flow Chart	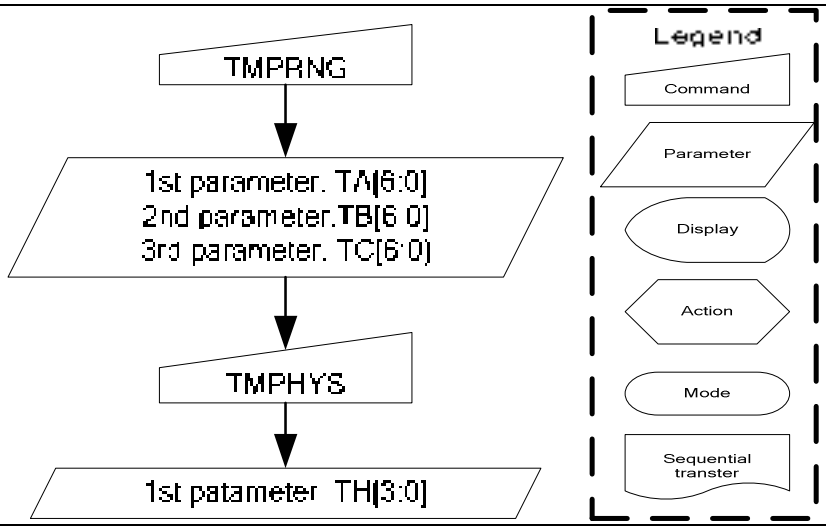 TMPRNG 1st parameter. TA[6:0] 2nd parameter.TB[6:0] 3rd parameter. TC[6:0] TMPHYS 1st patameter TH[3:0] Legend Command Parameter Display Action Mode Sequential transter

9.1.54 TMPHYS: Temp.Hysteresis Set for Frame Freq. Adj.(F3H)

	A0	RD	WR	D7	D6	D5	D4	D3	D2	D1	D0	HEX
Command	0	1	0	1	1	1	1	0	0	1	1	F3H
1st parameter	1	1	0	-	-	-	-	TH3	TH2	TH1	TH0	

Description

Temp. hysteresis range set for frame freq. adj.
Parameter TH[3:0] is used to set Temp. hysteresis range.
The relationship between temp. state and temp. range value is shown below.

TEMP Range Value	TEMP Rising State	TEMP Falling State
Freq. changing point A	TA[6:0]+TH[3:0]	TA[6:0]
Freq. changing point B	TB[6:0]+TH[3:0]	TB[6:0]
Freq. changing point C	TC[6:0]+TH[3:0]	TC[6:0]

TH Temperature(℃) - 1 = TH[3:0]
Example:
If TH wants to set 5℃, TH[3:0]=5-1=4.

Restriction

Temp. hysteresis value should be smaller than the gap of temp. range.

Register Availability

Status	Availability
Normal Mode On, Idle Mode Off, Sleep Out	Yes
Normal Mode On, Idle Mode On, Sleep Out	Yes
Partial Mode On, Idle Mode Off, Sleep Out	Yes
Partial Mode On, Idle Mode On, Sleep Out	Yes
Sleep In	Yes

Default

Status	Default Value(TH[3:0])
Power On Sequence	04h
S/W Reset	04h
H/W Reset	04h

Flow Chart	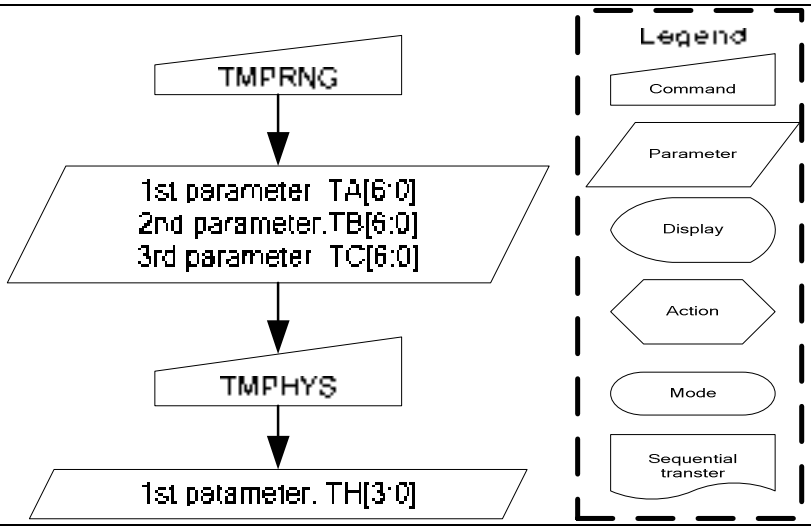 TMPRNG 1st parameter TA[6:0] 2nd parameter.TB[6:0] 3rd parameter TC[6:0] TMPHYS 1st patameter. TH[3:0] Legend Command Parameter Display Action Mode Sequential transter

9.1.55 TEMPSEL: Temp. Set(F4H)

Command	*A0*	*/RD*	*/WR*	*D7*	*D6*	*D5*	*D4*	*D3*	*D2*	*D1*	*D0*	*Hex*
TEMPSEL	0	1	0	1	1	1	1	0	1	0	0	**(F4h)**
1st parameter	1	1	0	MT13	MT12	MT11	MT10	MT03	MT02	MT01	MT00	MT1x: (-24 °C to -32 °C) MT0x: (-32 °C to -40 °C)
2nd parameter	1	1	0	MT33	MT32	MT31	MT30	MT23	MT22	MT21	MT20	MT3x: (-8 °C to -16 °C) MT2x: (-16 °C to -24 °C)
3rd parameter	1	1	0	MT53	MT52	MT51	MT50	MT43	MT42	MT41	MT40	MT5x: (8 °C to 0 °C) MT4x: (0 °C to -8 °C)
4th parameter	1	1	0	MT73	MT72	MT71	MT70	MT63	MT62	MT61	MT60	MT7x: (24 °C to16 °C) MT6x: (16 °C to 8 °C)
5th parameter	1	1	0	MT93	MT92	MT91	MT90	MT83	MT82	MT81	MT80	MT9x: (40 °C to 32 °C) MT8x: (32 °C to 24 °C)
6th parameter	1	1	0	MTB3	MTB2	MTB1	MTB0	MTA3	MTA2	MTA1	MTA0	MTBx: (56 °C to 48 °C) MTAx: (48 °C to 40 °C)
7th parameter	1	1	0	MTD3	MTD2	MTD1	MTD0	MTC3	MTC2	MTC1	MTC0	MTDx: (72 °C to 64 °C) MTCx: (64 °C to 56 °C)
8th parameter	1	1	0	MTF3	MTF2	MTF1	MTF0	MTE3	MTE2	MTE1	MTE0	MTFx: (87 °C to 80 °C) MTEx: (80 °C to 72 °C)

NOTE: "-" Don't care

Description

This command defines temperature gradient compensation coefficient. For this command detail description and opearation, please see Figure 7.8.

Parameter n	MT n 3	MT n 2	MT n 1	MT n 0	Voltage / °C
0	**0**	**0**	**0**	**0**	**5 mv / °C**
1	**0**	**0**	**0**	**1**	**0 mv / °C**
2	**0**	**0**	**1**	**0**	**-5 mv / °C**
3	**0**	**0**	**1**	**1**	**-10 mv / °C**
: **:** **:**	**:** **:** **:**	**:** **:** **:**	**:** **:** **:**	**:** **:** **:**	**:** **:** **:**
12	**1**	**1**	**0**	**0**	**-55 mv / °C**
13	**1**	**1**	**0**	**1**	**-60 mv / °C**
14	**1**	**1**	**1**	**0**	**-65 mv / °C**
15	**1**	**1**	**1**	**1**	**-70 mv / °C**

Voltage/℃ (+/- 5mV tolerance)

Restriction

Register Availability

Status	Availability
Normal Mode On, Idle Mode Off, Sleep Out	Yes
Normal Mode On, Idle Mode On, Sleep Out	Yes
Partial Mode On, Idle Mode Off, Sleep Out	Yes
Partial Mode On, Idle Mode On, Sleep Out	Yes
Sleep In	Yes

Default

Status	Default Value (MTn[3:0])
Power On Sequence	1st parameter : FFh 2nd parameter : 36h 3rd parameter : 04h 4th parameter : 00h 5th parameter : 33h 6th parameter : 42h 7th parameter : C4h 8th parameter : 59h
S/W Reset	
H/W Reset	

Flow Chart

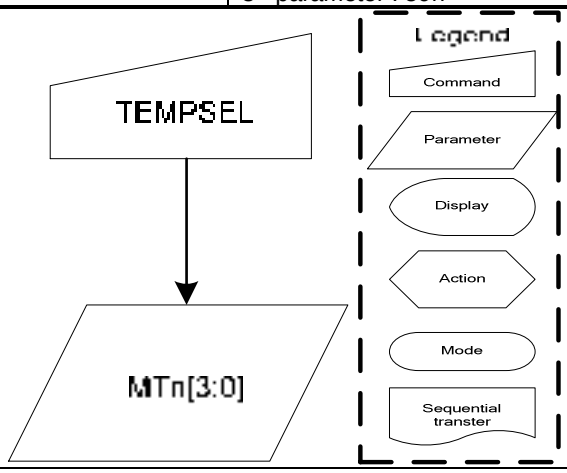

9.1.56 THYS : Temperature detection threshold(F7H)

Command	*A0*	*/RD*	*/WR*	*D7*	*D6*	*D5*	*D4*	*D3*	*D2*	*D1*	*D0*	*Hex*
THYS	0	1	0	1	1	1	1	0	1	1	1	**(F7h)**
Parameter	1	1	0	THYS7	THYS6	THYS5	THYS4	THYS3	THYS2	THYS1	THYS0	**-**

NOTE: "-" Don't care

Description	Temperature detection threshold setting.
Restriction	
Register Availability	

Status	Availability
Normal Mode On, Idle Mode Off, Sleep Out	Yes
Normal Mode On, Idle Mode On, Sleep Out	Yes
Partial Mode On, Idle Mode Off, Sleep Out	Yes
Partial Mode On, Idle Mode On, Sleep Out	Yes
Sleep In	Yes

Default

Status	Default Value D[7:0]
Power On Sequence	06h
S/W Reset	06h
H/W Reset	06h

Flow Chart

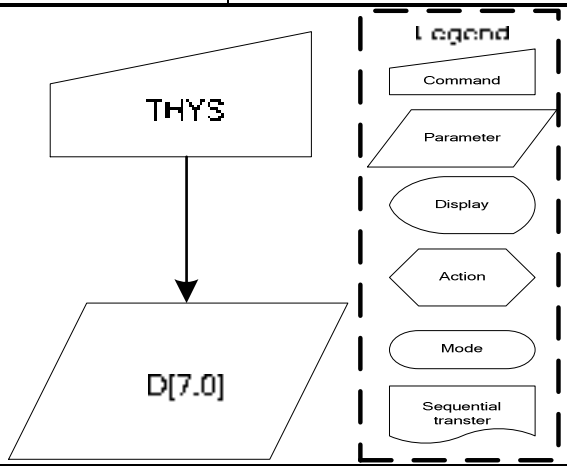

9.1.57 Frame Set: Frame PWM Set (F9H)

Command	*A0*	*/RD*	*/WR*	*D7*	*D6*	*D5*	*D4*	*D3*	*D2*	*D1*	*D0*	*Hex*
Frame Set	0	1	0	1	1	1	1	1	0	0	1	**(F9h)**
1st parameter	1	1	0	-	-	-	P14	P13	P12	P11	P10	-
2nd parameter	1	1	0	-	-	-	P24	P23	P22	P21	P20	-
:	:	:	:	:	:	:	:	:	:	:	:	-
15th parameter	1	1	0	-	-	-	P154	P153	P152	P151	P150	-
16th parameter	1	1	0	-	-	-	P164	P163	P162	P161	P160	-

NOTE: "-" Don't care

Description	This command is used to set frame PWM.
Restriction	
Register Availability	

Status	Availability
Normal Mode On, Idle Mode Off, Sleep Out	Yes
Normal Mode On, Idle Mode On, Sleep Out	Yes
Partial Mode On, Idle Mode Off, Sleep Out	Yes
Partial Mode On, Idle Mode On, Sleep Out	Yes
Sleep In	Yes

Default

Status	Default Value
Power On Sequence	Refer to the table on next page.
S/W Reset	Refer to the table on next page.
H/W Reset	Refer to the table on next page.

Flow Chart

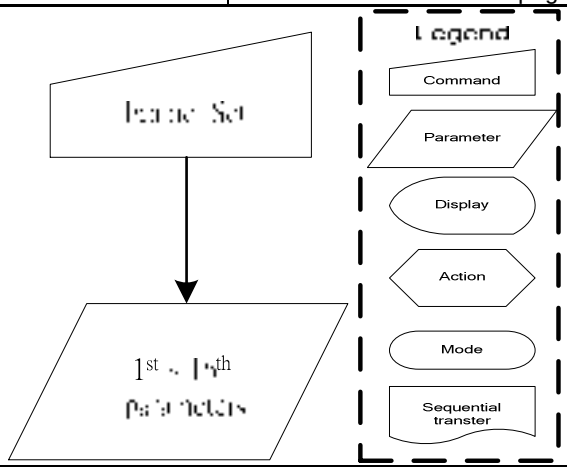

NOTE:

The default value of RGB level set

	RGB SET
RGB level0	00
RGB level1	01
RGB level2	02
RGB level3	04
RGB level4	06
RGB level5	07
RGB level6	09
RGB level7	0A
RGB level8	0B
RGB level9	0C
RGB level10	0D
RGB level11	0F
RGB level12	11
RGB level13	12
RGB level14	17
RGB level15	1A

All the modulation range of each level for each frame is from 00’H to 1F’H.

10. SPECIFICATIONS

10.1 ABSOLUTE MAXIMUM RATINGS

(V_{SS} = 0V)

Item	Symbol	Value	Unit
Supply voltage (1)	V_{DD}, V_{DD1}	- 0.3 ~ + 3.0	V
Supply voltage (1)	V_{DD2}, V_{DD3}, V_{DD4}, V_{DD5}	- 0.3 ~ + 4.2	V
Supply voltage (2)	V_{LCD} (V0-VSS)	- 0.3 ~ + 18.0	V
Supply voltage (3)	V_{mAX} (V0- XV0)	- 0.3 ~ + 18.0	V
Input voltage range	V_{IN}	- 0.3 ~ V_{DD} + 0.5	V
Output voltage range	V_O	- 0.3 ~ V_{DD} + 0.5	V
Operating temperature range	T_{OPR}	- 30 ~ + 85	℃
Storage temperature range	T_{STG}	- 40 ~ + 125	℃

NOTE:

1. Voltages are all based on VSS = 0V.

2. Voltage relationship: V0. Vg. Vm. VSS. XV0 must always be satisfied.

3. External V0,XV0

10.2DC CHARACTERISTICS

10.2.1 Basic Characteristics

(V_{SS}=0V, Ta = -30 to 70℃)

Parameter	Symbol	Conditions	Related Pins	MIN	TYP	MAX	Unit
Logic Operating voltage	V_{DDI}	-	*2) VDD,VDD1	1.65	1.8	2.9	V
Analog Operating voltage	V_{DDA}	-	*2) VDD2,3,4,5	2.4	2.75	3.3	
Driving voltage input	V_{LCD}	V0 - VSS	*3) V0, VSS	-	-	18.0	
	XV_{LCD}	VSS – XV0	*3) VSS, XV0	-	-	18.0	
High level input voltage	V_{IH}		*1) *2)	$0.7V_{DD}$	-	V_{DD}	
Low level input voltage	V_{IL}	-	*1) *2)	V_{SS}	-	$0.3V_{DD}$	
High level output voltage	V_{OH}	I_{OH} = -1.0mA	*2) SI	$0.8V_{DD}$	-	V_{DD}	
Low level output voltage	V_{OL}	I_{OL} = +1.0mA		V_{SS}	-	$0.2V_{DD}$	
Input leakage current	I_{IL}	V_{IN} = V_{DD} or V_{SS}	*1), *2)	-1.0	-	+1.0	μA
Driver on resistance (SEG)	R_{ONSEG}	Vg = 5.0V	S0 to S305	-	0.5	1.0	KΩ
Driver on resistance (COM)	R_{ONCOM}	V0 = 10.0V	C0 to C95	-	0.5	1.0	
External oscillator frequency	f_{OSC}	fFR=77Hz	CL	-	460	-	kHz
Reference voltage	V_{REF}	No load	-	1.75	1.8	1.85	V
Voltage follower output voltage	Vm	Ta = 25℃	-	0.7	Vg/2	V_{DD2}-0.7	V
	Vg		-	1.8	-	V_{DD2}X2	V

NOTE:

**1) Applies to IF1, IF2, IF3, /CS, /RST, /WR, /RD, A0(SCL) and*

D15-D2, D1 (A0) ,D0(SI) pins

**2) *3) When the measurements are performed with LCD module, Measurement Points are like below.*

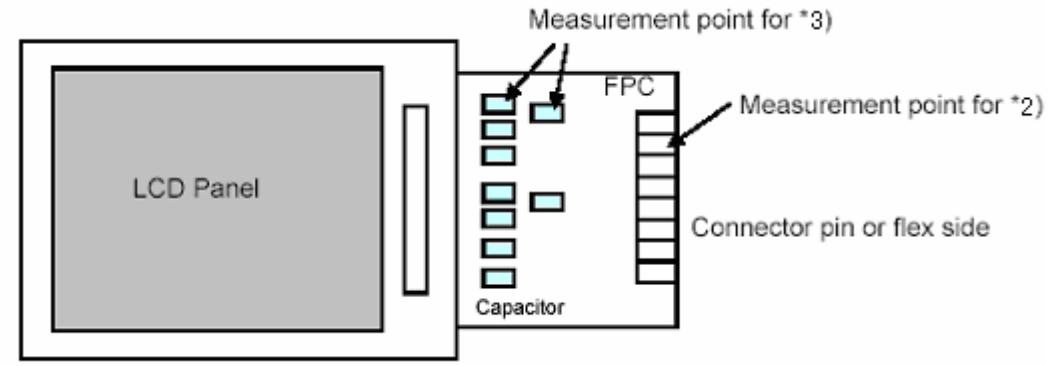

10.2.2 Current Consumption (Bare Die)

Test pattern	Symbol	Condition	Rating			Units	Notes
			Min.	Typ.	Max.		
Display Pattern Normal	ISS	**VDDI=1.8V, VDDA=2.8V, Vop=11V, Booster=8X, BIAS=1/9, Booster efficiency=01, Ta = 25℃.**	—	500	—	μA	*1
Power Down	ISS		—	3	10	μA	

Note:

**1) It indicates the current consumed on ICs alone when the internal oscillator circuit and display are turned on.*

11. TIMING CHARACTERISTICS

11.1 Parallel Interface Characteristics bus (8080-series MCU)

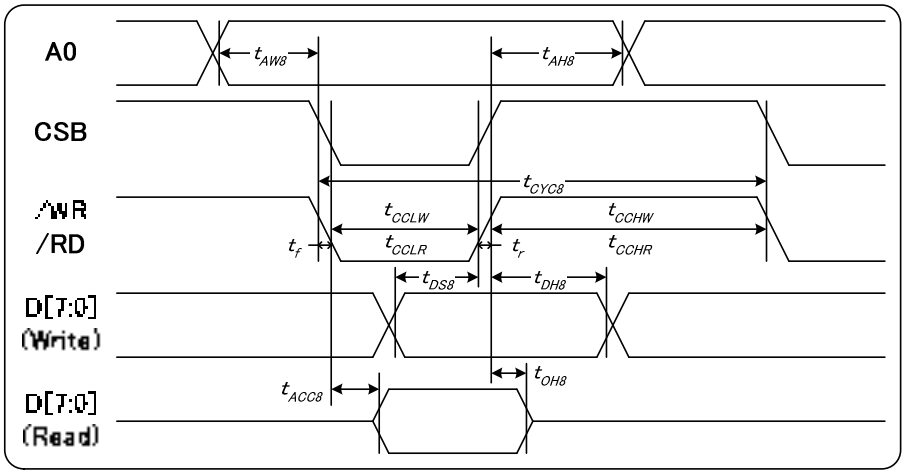

Figure 11.1 Parallel Interface Characteristics bus(8080-series MCU)

(V_{DD}=2.8V, Ta= –30℃ to 85℃, die)

Item	Signal	Symbol	Condition	Rating		Units
				Min.	Max.	
Address hold time	A0	tAH8		10	—	ns
Address setup time		tAW8		15	—	
System cycle time (WRITE)	WR	tCYC8		145	—	
/WR L pulse width (WRITE)		tCCLW		55	—	ns
/WR H pulse width (WRITE)		tCCHW		90	—	
System cycle time (READ)	RD (FM)	tCYC8	When read from frame memory	175	—	
/RD L pulse width (READ)		tCCLR		55	—	
/RD H pulse width (READ)		tCCHR		120	—	
WRITE data setup time	D0 to D7	tDS8		50	—	
WRITE data hold time		tDH8		10	—	

(V_{DD}=1.8V, Ta= –30℃ to 85℃, die)

Item	Signal	Symbol	Condition	Rating		Units
				Min.	Max.	
Address hold time	A0	tAH8		10	—	ns
Address setup time		tAW8		20	—	
System cycle time (WRITE)	WR	tCYC8		245	—	
/WR L pulse width (WRITE)		tCCLW		100	—	ns
/WR H pulse width (WRITE)		tCCHW		145	—	
System cycle time (READ)	RD (FM)	tCYC8	When read from frame memory	250	—	
/RD L pulse width (READ)		tCCLR		70	—	
/RD H pulse width (READ)		tCCHR		180	—	
WRITE data setup time	D0 to D7	tDS8		70	—	
WRITE data hold time		tDH8		20	—	

*1 The input signal rise time and fall time (tr, tf) is specified at 15 ns or less. When the system cycle time is extremely fast, (tr +tf) ≦ (tCYC8 – tCCLW – tCCHW) for (tr + tf) ≦ (tCYC8 – tCCLR – tCCHR) are specified.

*2 All timing is specified using 20% and 80% of VDD as the reference.

*3 tCCLW and tCCLR are specified as the overlap between /CS being “L” and WR and RD being at the “L” level.

11.2 Parallel Interface Characteristics bus (6800-series MCU)

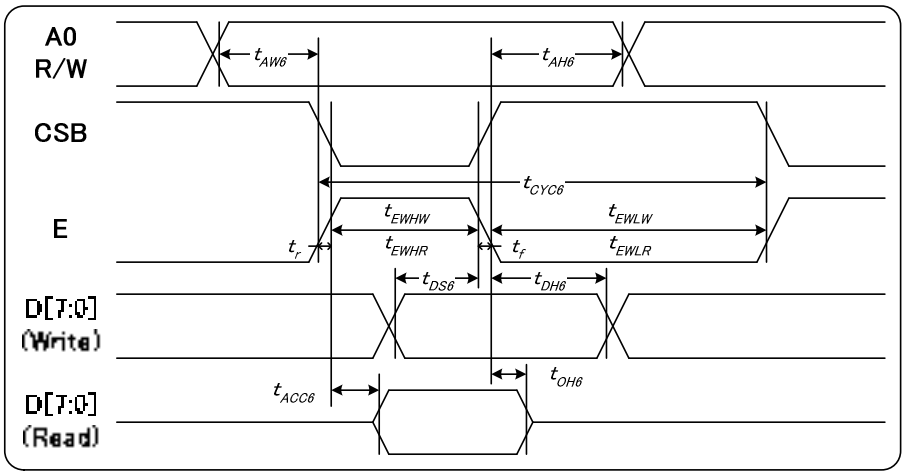

Figure 11.2 Parallel Interface characteristics (6800-Series MCU)

(V_{DD}=2.8V, Ta= –30°C to 85°C, die)

Item	Signal	Symbol	Condition	Rating		Units
				Min.	Max.	
Address hold time	A0	tAH6		10	—	ns
Address setup time		tAW6		20	—	
System cycle time (WRITE)	E	tCYC6		155	—	
/WR L pulse width (WRITE)		tEWHW		95	—	ns
/WR H pulse width (WRITE)		tEWLW		60	—	
System cycle time (READ)	RD (FM)	tCYC6	When read from frame memory	175	—	
/RD L pulse width (READ)		tEWHR		110	—	
/RD H pulse width (READ)		tEWHR		65	—	
WRITE data setup time	D0 to D7	tDS6		50	—	
WRITE data hold time		tDH6		10	—	

(V_{DD}=1.8V, Ta= –30℃ to 85℃, die)

Item	Signal	Symbol	Condition	Rating		Units
				Min.	Max.	
Address hold time	A0	tAH6		15	—	ns
Address setup time		tAW6		20	—	
System cycle time (WRITE)	E	tCYC6		210	—	
/WR L pulse width (WRITE)		tEWHW		130	—	ns
/WR H pulse width (WRITE)		tEWLW		80	—	
System cycle time (READ)	RD (FM)	tCYC6	When read from frame memory	300	—	
/RD L pulse width (READ)		tEWHR		200	—	
/RD H pulse width (READ)		tEWHR		100	—	
WRITE data setup time	D0 to D7	tDS6		55	—	
WRITE data hold time		tDH6		10	—	

*1 The input signal rise time and fall time (tr, tf) is specified at 15 ns or less. When the system cycle time is extremely fast, (tr +tf) ≦ (tCYC6 – tEWLW – tEWHW) for (tr + tf) ≦ (tCYC6 – tEWLR – tEWHR) are specified.

*2 All timing is specified using 20% and 80% of VDD as the reference.

*3 tEWLW and tEWLR are specified as the overlap between /CS being “L” and E.

11.3 Serial Interface Characteristics (3-pin Serial)

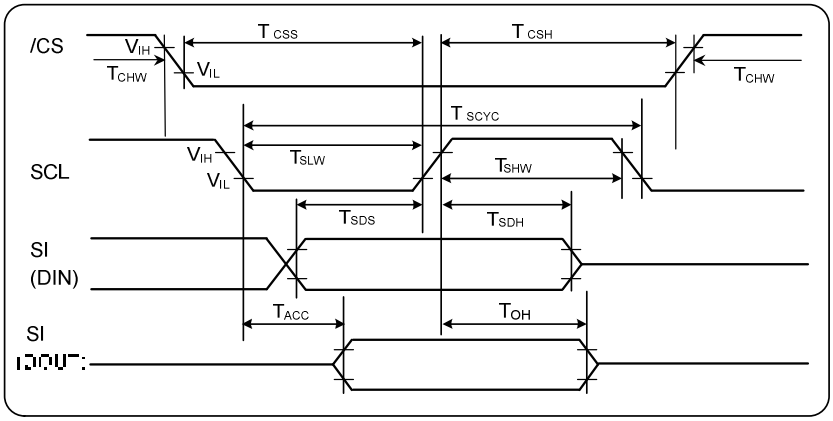

Figure 11.3 3-pin Serial Interface Characteristics

(V_{DD}=2.8V, Ta= –30°C to 85°C, die)

Item	Signal	Symbol	Condition	Rating		Units
				Min.	Max.	
Serial clock period (write)	SCL	tSCYCW		80	—	ns
SCL “H” pulse width (write)		tSHW		25	—	
SCL “L” pulse width (write)		tSLW		25	—	
Data setup time	SI	tSDS		20	—	
Data hold time		tSDH		20	—	
CS-SCL time	/CS	tCSS		25	—	
CS-SCL time		tCSH		25	—	

(V_{DD}=1.8V, Ta= –30°C to 85°C, die)

Item	Signal	Symbol	Condition	Rating		Units
				Min.	Max.	
Serial clock period (write)	SCL	tSCYCW		100	—	ns
SCL “H” pulse width (write)		tSHW		35	—	
SCL “L” pulse width (write)		tSLW		35	—	
Data setup time	SI	tSDS		30	—	
Data hold time		tSDH		30	—	
CS-SCL time	/CS	tCSS		35	—	
CS-SCL time		tCSH		35	—	

*1 The input signal rise and fall time (tr, tf) are specified at 15 ns or less.

*2 All timing is specified using 20% and 80% of VDD as the standard.

11.4 Serial Interface Characteristics (4-pin Serial)

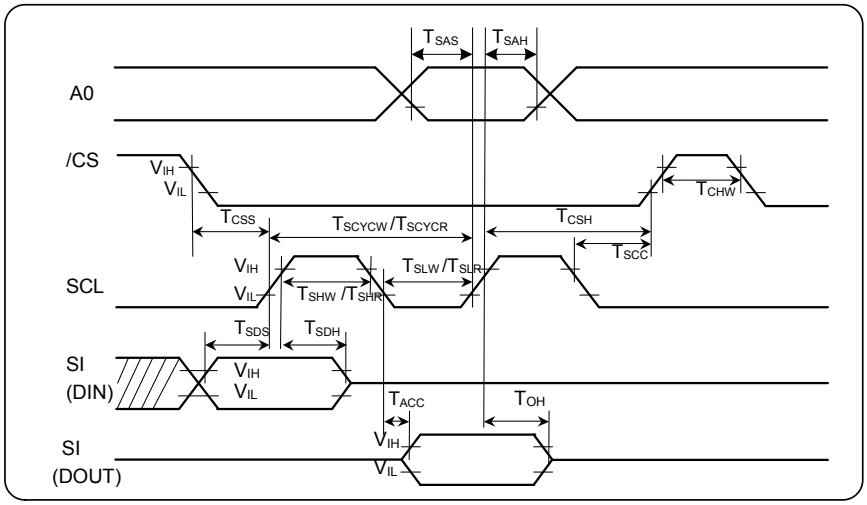

Figure 11.4 4-pin Serial Interface Characteristics

(V_{DD}=2.8V, Ta= –30℃ to 85℃, die)

Item	Signal	Symbol	Condition	Rating		Units
				Min.	Max.	
Serial clock period (write)	SCL	tSCYCW		80	—	ns
SCL “H” pulse width (write)		tSHW		25	—	
SCL “L” pulse width (write)		tSLW		25	—	
Address setup time	A0	tSAS		15	—	
Address hold time		tSAH		20	—	
Data setup time	SI	tSDS		20	—	
Data hold time		tSDH		20	—	
CS-SCL time	/CS	tCSS		25	—	
CS-SCL time		tCSH		25	—	

(V_{DD}=1.8V, Ta= –30℃ to 85℃, die)

Item	Signal	Symbol	Condition	Rating		Units
				Min.	Max.	
Serial clock period (write)	SCL	tSCYCW		100	—	ns
SCL “H” pulse width (write)		tSHW		35	—	
SCL “L” pulse width (write)		tSLW		35	—	
Address setup time	A0	tSAS		25	—	
Address hold time		tSAH		30	—	
Data setup time	SI	tSDS		30	—	
Data hold time		tSDH		30	—	
CS-SCL time	/CS	tCSS		35	—	
CS-SCL time		tCSH		35	—	

*1 The input signal rise and fall time (tr, tf) are specified at 15 ns or less.

*2 All timing is specified using 20% and 80% of VDD as the standard.

11.5 Ouput access/disable timing measurement method

◆ Parallel interface (8080-series)

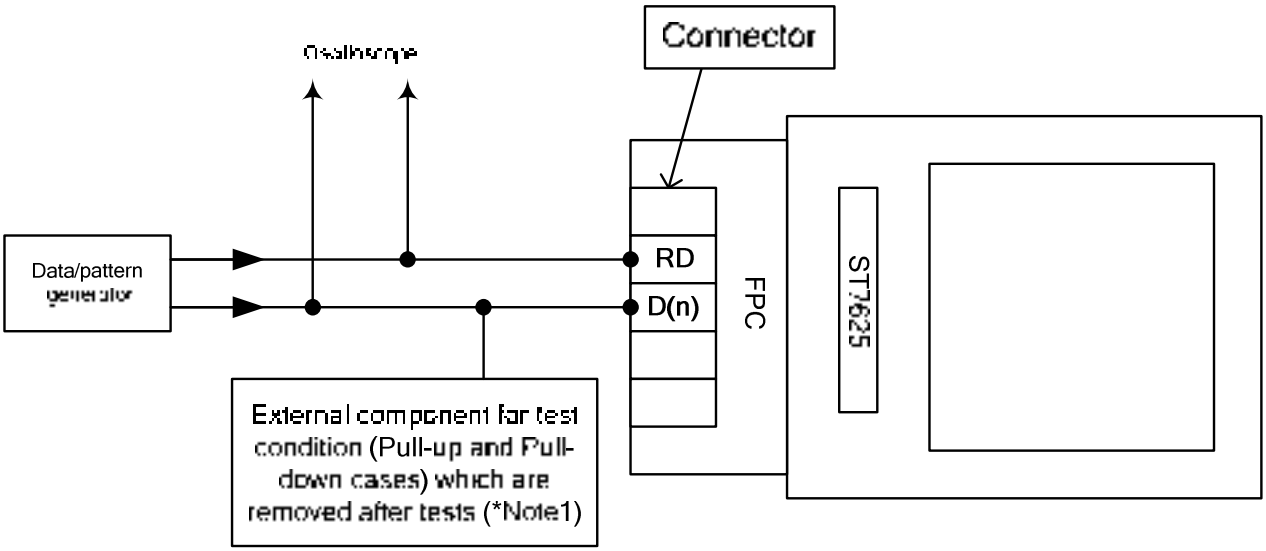

◆ Serial interface (3-line)

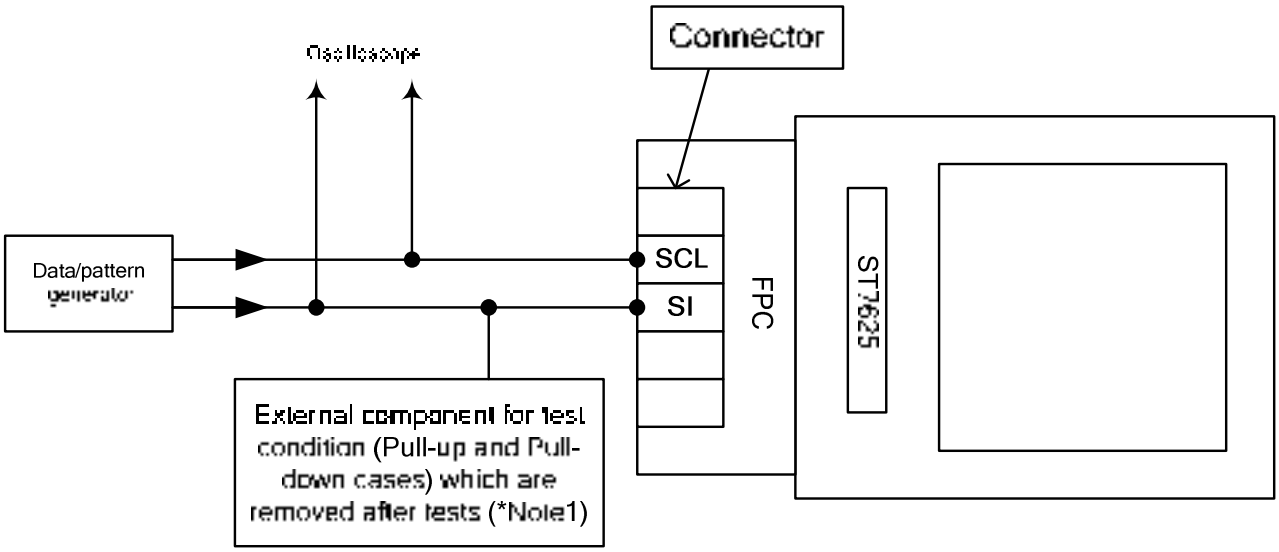

Note:

1. pull-up/pull-down resistor: ***3KΩ ± 5% ;*** *pull-up/pull-down capacitor:* ***8 or 30 pF ± 10%***

2. Capacitances and resistances of the oscilloscope's probe must be included externals components in these measurements.

12. RESET TIMING

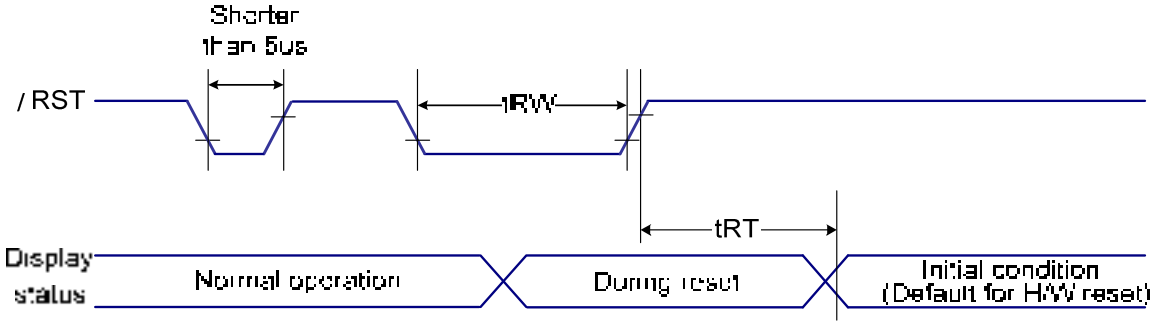

(VSS=0V, VDDI=1.65V to 3.0V, VDDA=2.4V to 3.3V,Ta = -30 to 70℃)

Item	Signal	Symbol	Condition	Rating		Units
				Min.	Max.	
Reset “L” pulse width	/RST	tRW		10	—	us
Reset time		tRT		—	5 (*note 5)	ms
				—	120 (*note 6,7)	ms

Notes:

1. The reset cancel includes also required time for loading ID bytes, VCOM setting and other settings from EEPROM (or similar device) to registers. This loading is done every time when there is HW reset cancel time (tRT) within 5 ms after a rising edge of /RST

2. Spike due to an electrostatic discharge on /RST line does not cause irregular system reset according to the table below:

/RST Pulse	Action
Shorter than 5μs	Reset Rejected
Longer than 9μs	Reset
Between 5μs and 9μs	Reset starts

3. During the Resetting period, the display will be blanked (The display is entering blanking sequence, which maximum time is 120 ms, when Reset Starts in Sleep Out –mode. The display remains the blank state in Sleep In -mode.) and then return to Default condition for Hardware Reset.

4. Spike Rejection also applies during a valid reset pulse as shown below:

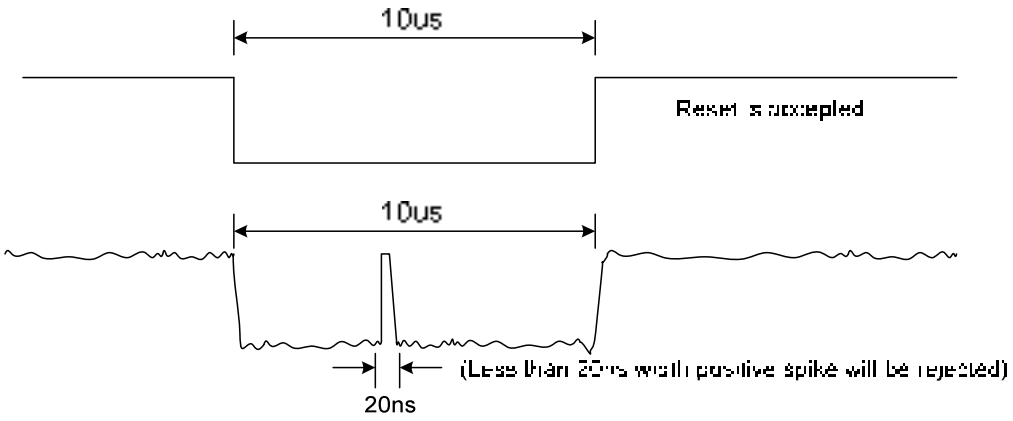

5. When Reset applied during Sleep In Mode.

6. When Reset applied during Sleep Out Mode.

7. It is necessary to wait 120msec after releasing RST before sending commands. Also Sleep Out command cannot be sent for 120msec.

13. THE MPU INTERFACE (REFERENCE EXAMPLES)

The ST7625 Series can be connected to either 8080 Series MPUs or to 6800 Series MPUs. Moreover, using the serial interface it is possible to operate the ST7625 series chips with fewer signal lines.

The display area can be enlarged by using multiple ST7625 Series chips. When this is done, the chip select signal can be used to select the individual ICs to access.

(1) 8080 Series MPUs

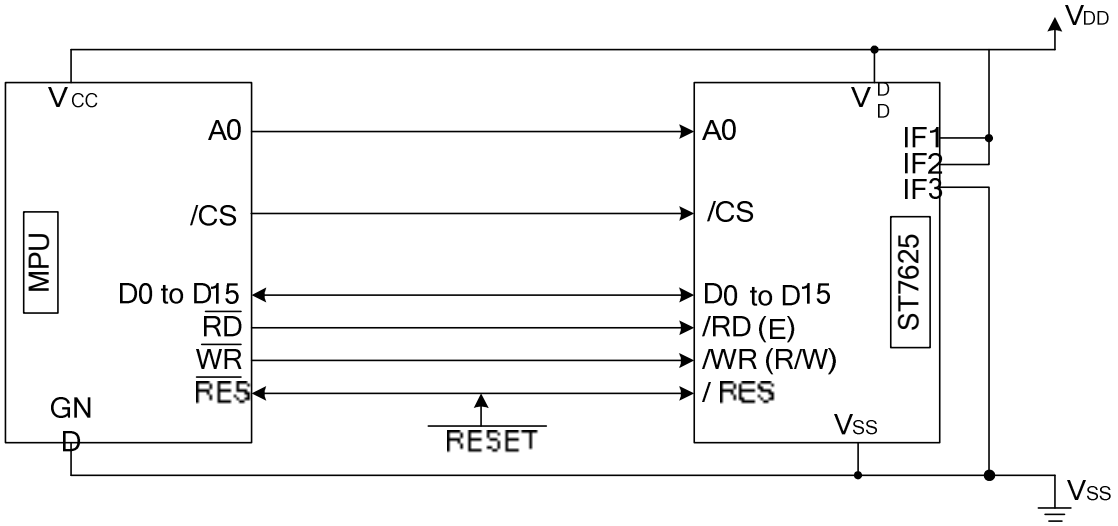

(2) 6800 Series MPUs

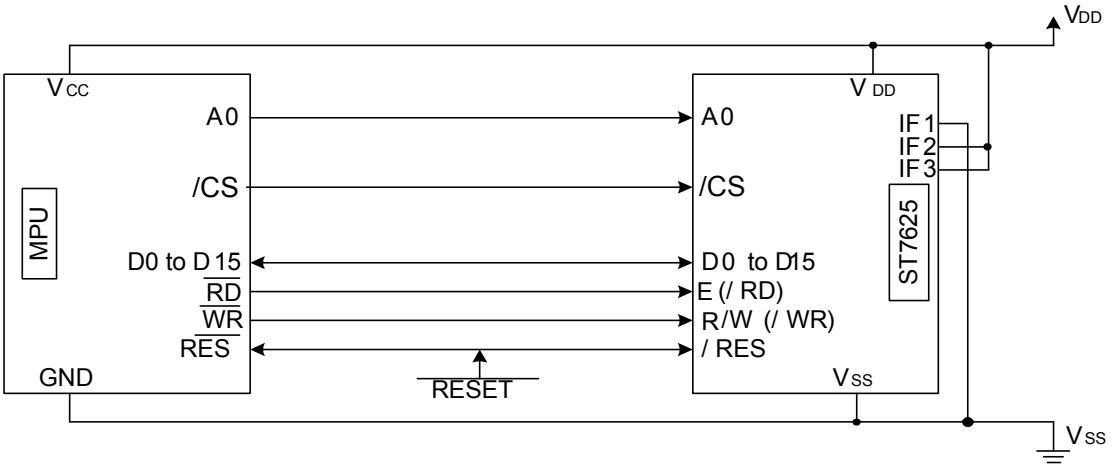

(3) Using the Serial Interface (4-line interface)

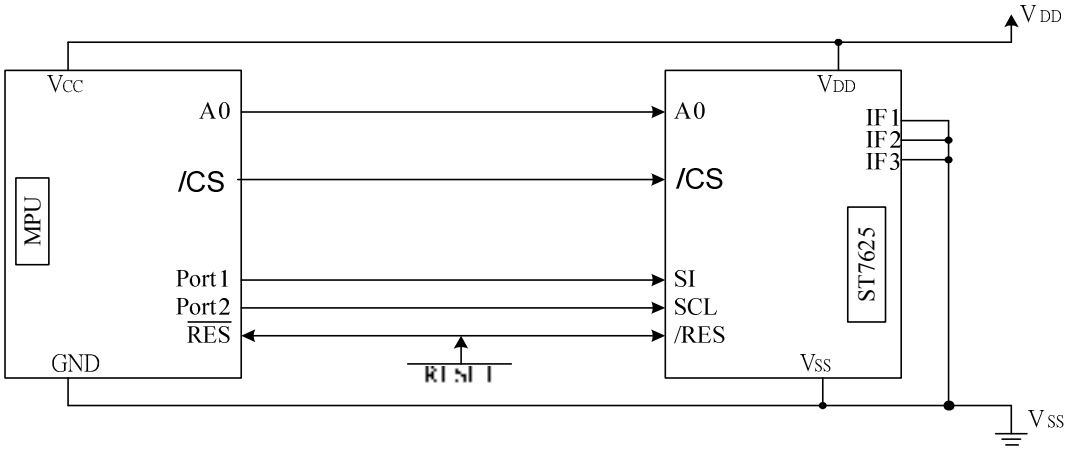

(4) Using the Serial Interface (3-line interface)

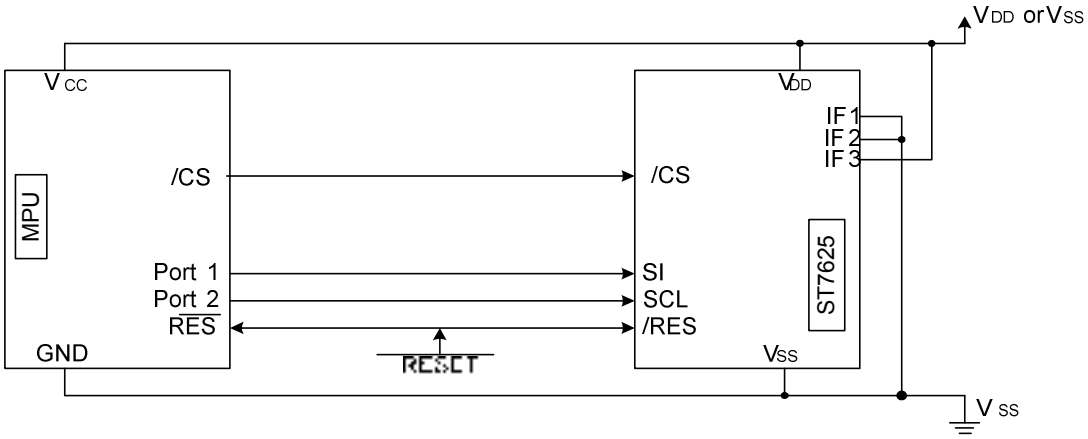

A- Application Note

A1 – 8080-16bit / COM interlace Mode

8080-16 Bit
IF1:IF2:IF3=1:1:1

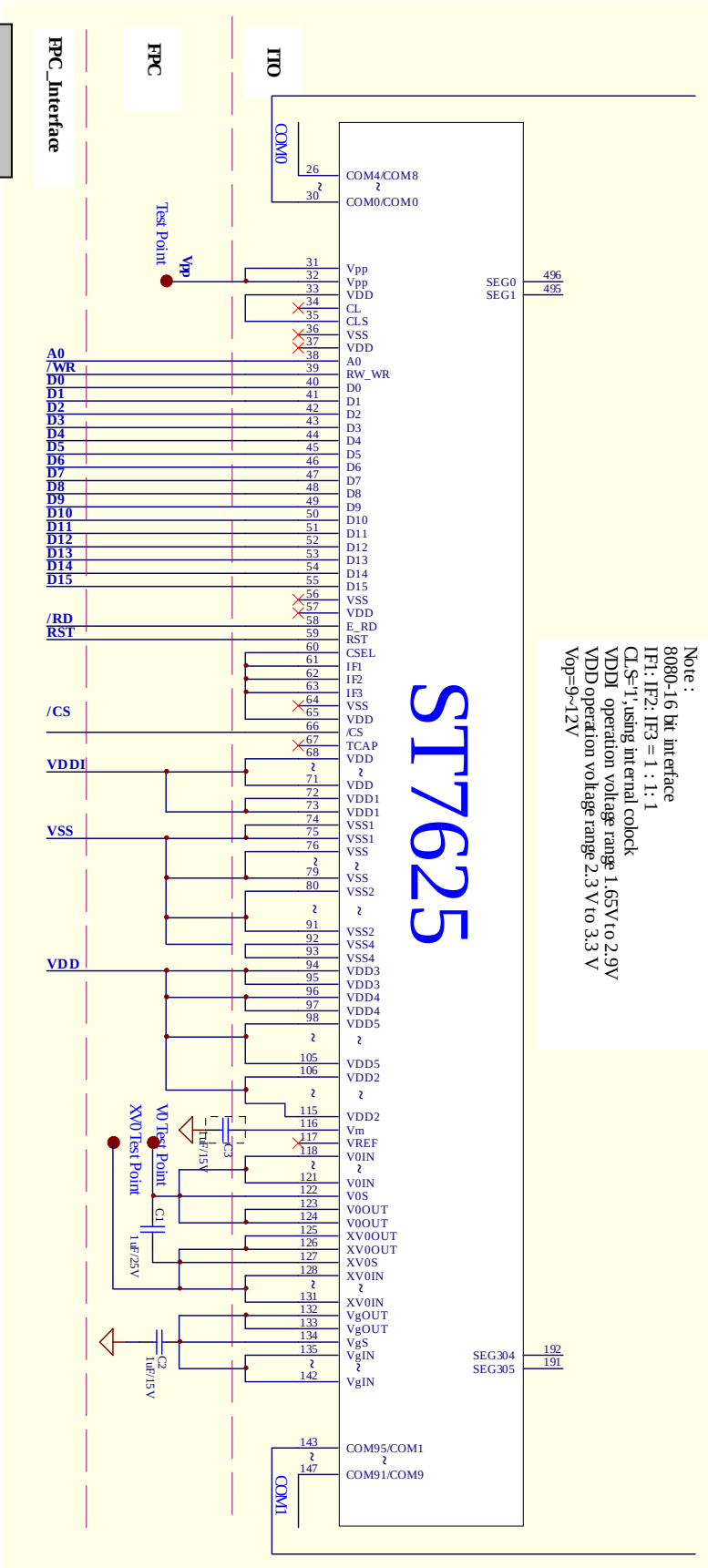

A2 –6800-16bit / COM interlace Mode

6800-16 Bit
IF1:IF2:IF3=1:0:0

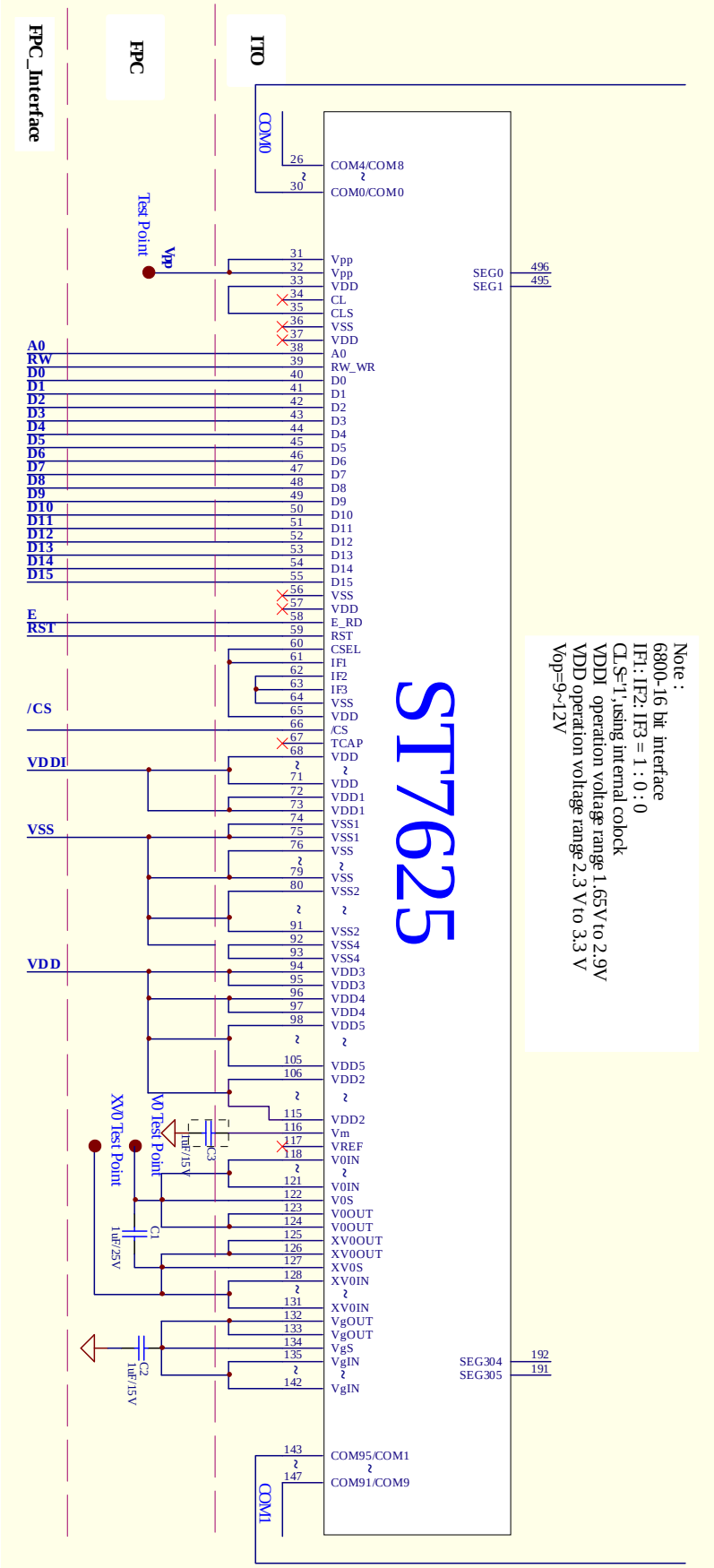

A3 –8080-8bit / COM interlace Mode

8080-8 Bit
IF1:IF2:IF3=1:1:0

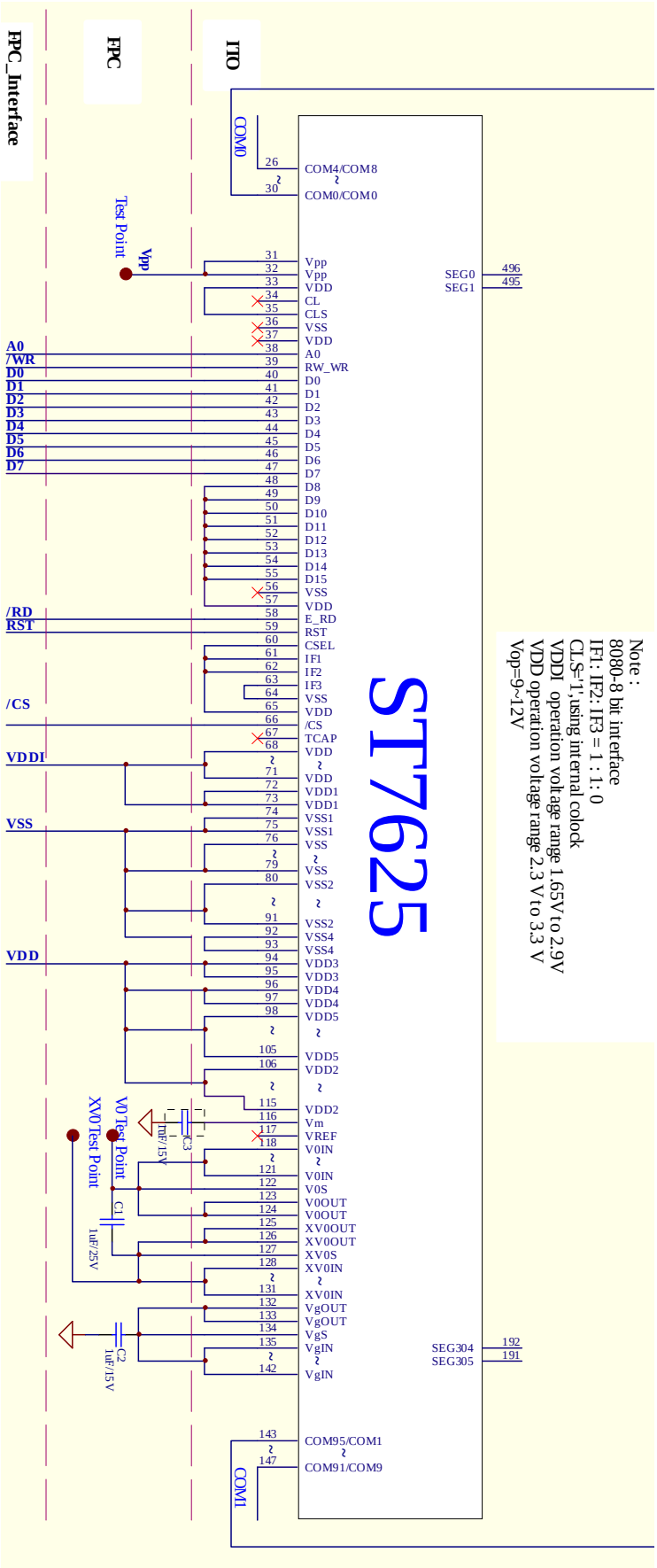

A4 – 6800-8bit / COM interlace Mode

6800-8 Bit
IF1:IF2:IF3=0:1:1

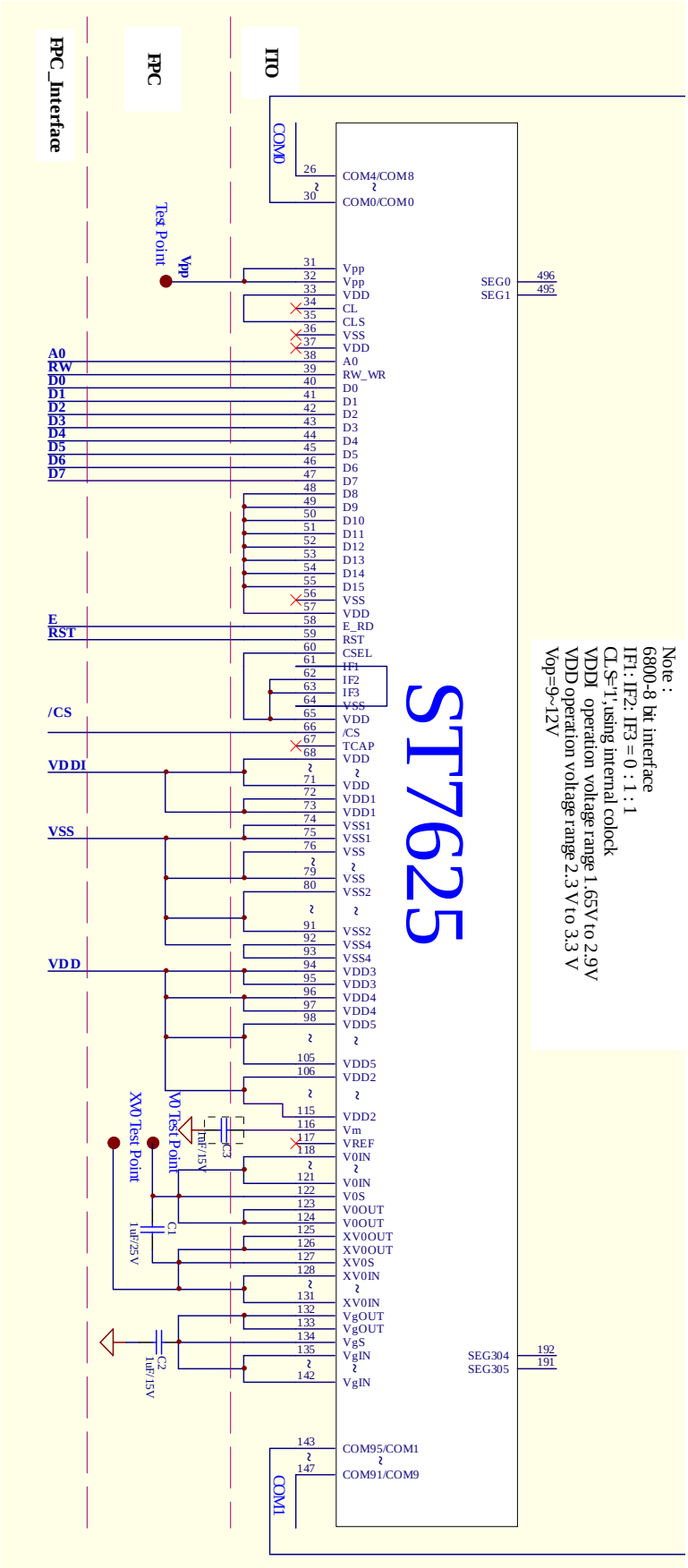

A5 – 4L SPI / COM interlace Mode

8 Bit 4SPI
IF1:IF2:IF3=0:0:1

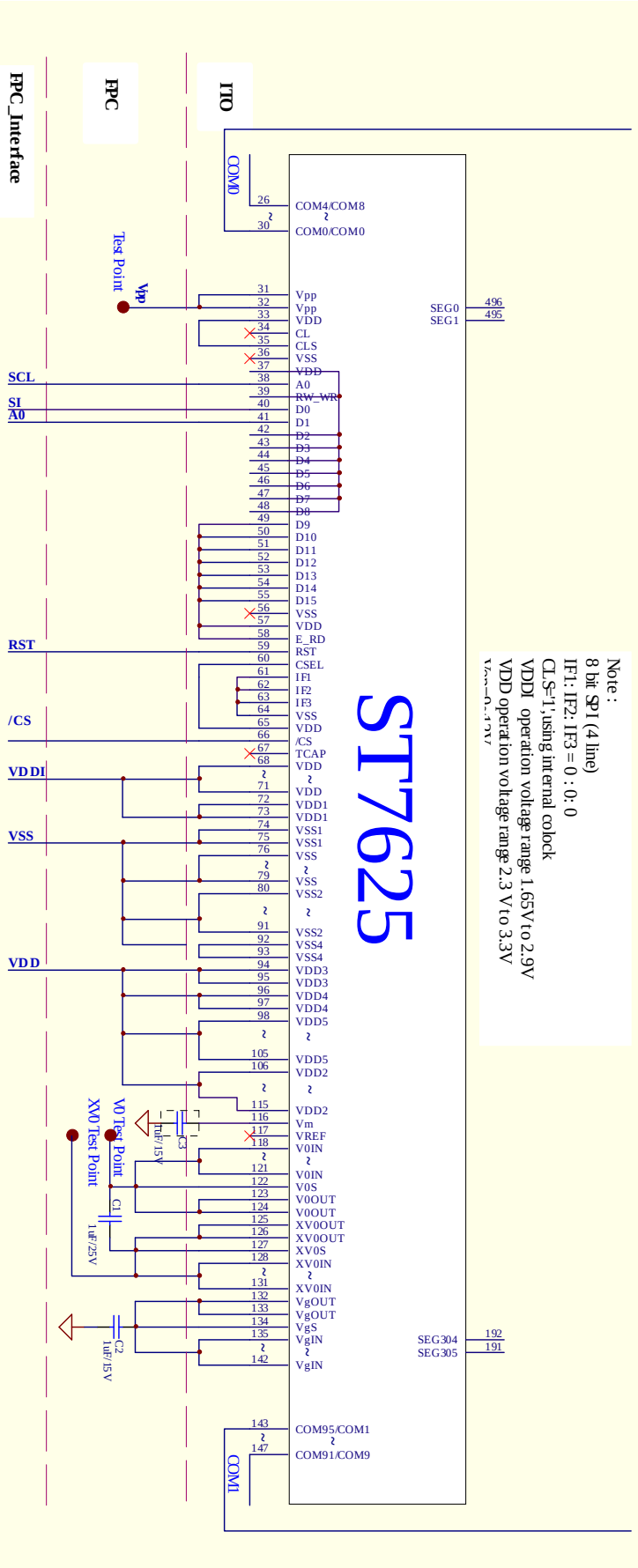

A6 – 4L SPI / COM interlace Mode

9 Bit 3SPI
IF1:IF2:IF3=0:0:1
”

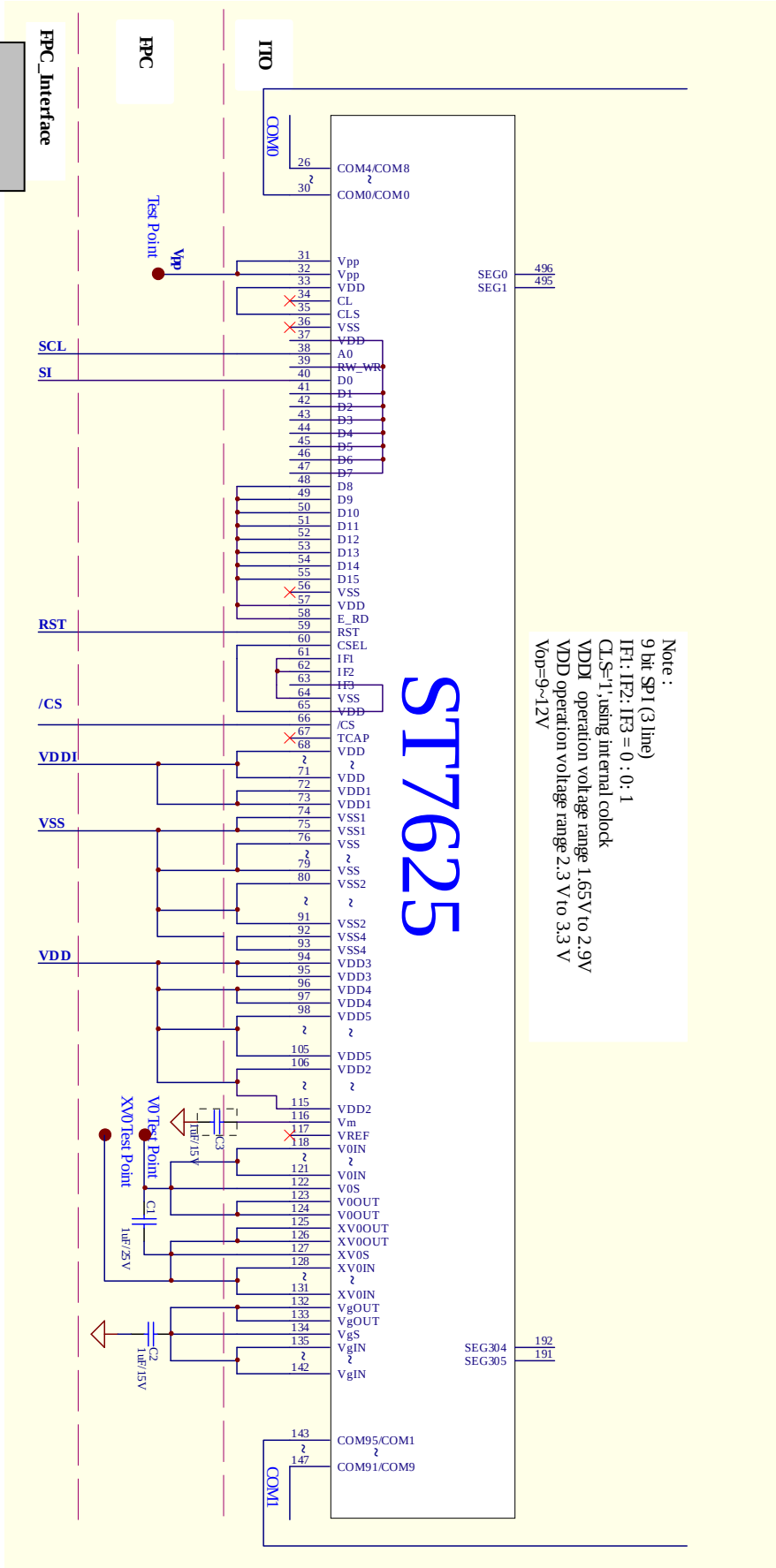

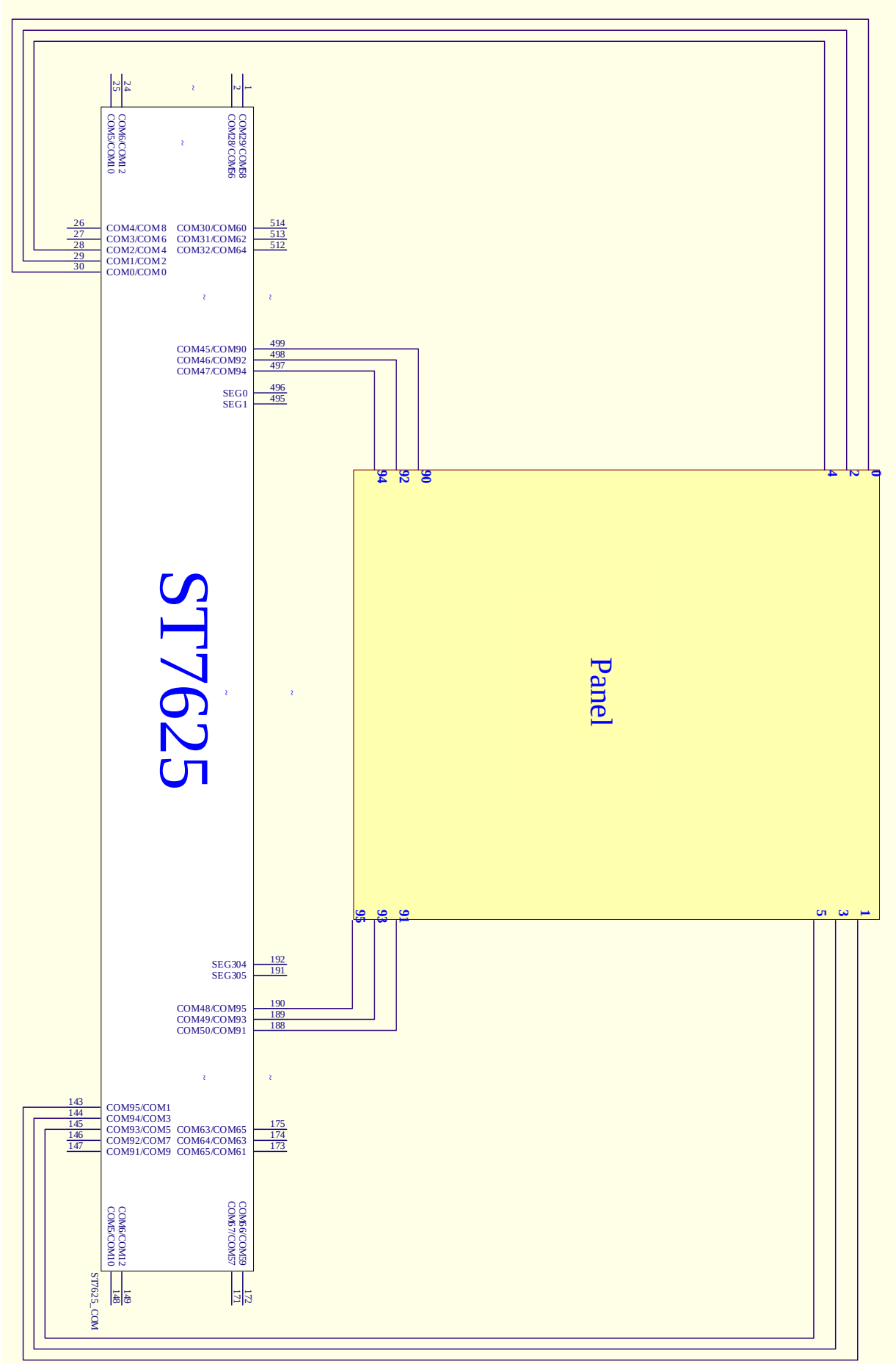
ST7625
Panel
COM29/COM58
COM28/COM56
COM6/COM12
COM5/COM10
1
2
24
25
COM30/COM60
COM31/COM62
COM32/COM64
COM4/COM8
COM3/COM6
COM2/COM4
COM1/COM2
COM0/COM0
514
513
512
26
27
28
29
30
COM45/COM90
COM46/COM92
COM47/COM94
499
498
497
SEG0
SEG1
496
495
0
2
4
90
92
94
1
3
5
91
93
95
SEG304
SEG305
192
191
COM48/COM95
COM49/COM93
COM50/COM91
190
189
188
COM63/COM65
COM64/COM63
COM65/COM61
175
174
173
COM95/COM1
COM94/COM3
COM93/COM5
COM92/COM7
COM91/COM9
143
144
145
146
147
COM66/COM59
COM67/COM57
COM6/COM12
COM5/COM10
172
171
149
148
ST7625_COM

A7 - Power On flow and sequence

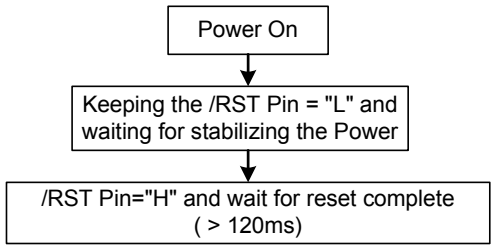

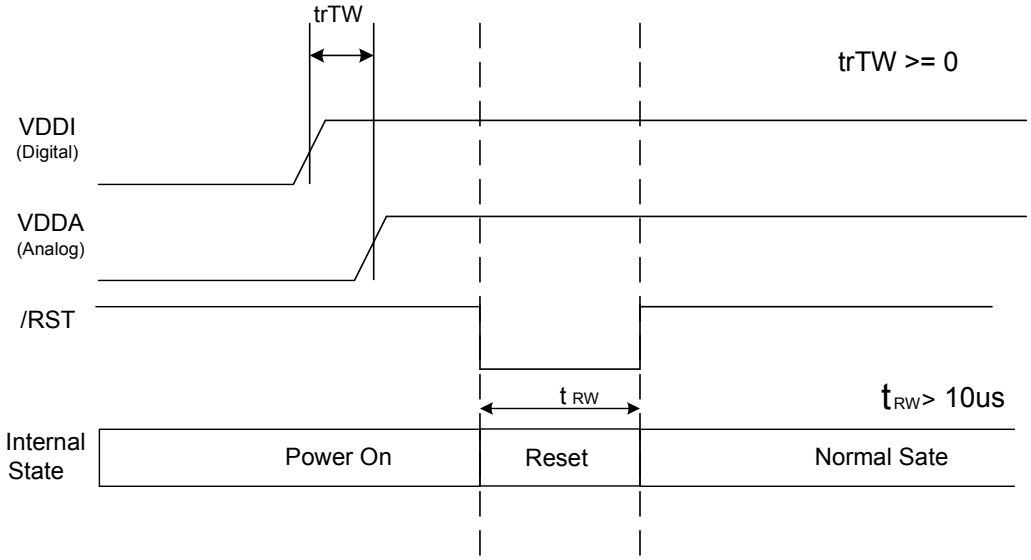

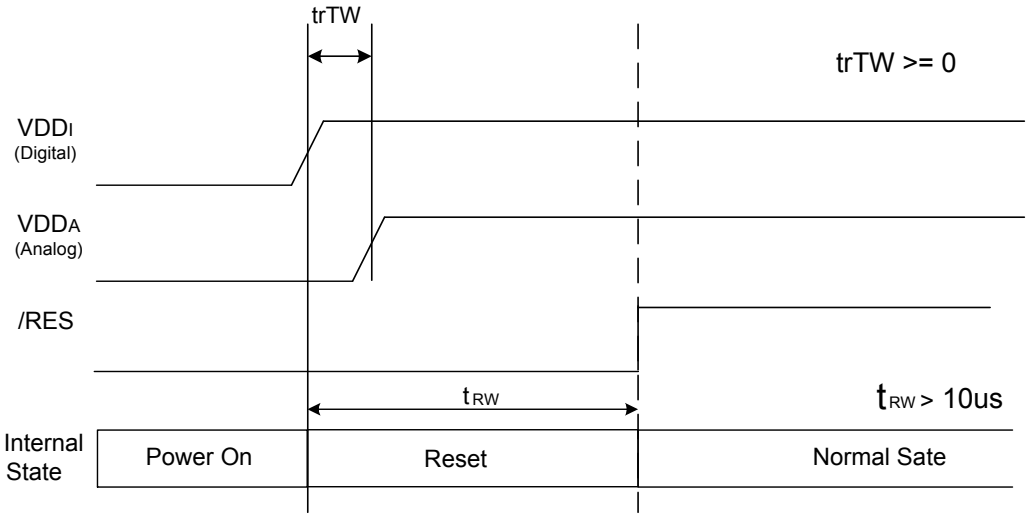

A8 - Power off flow and sequence

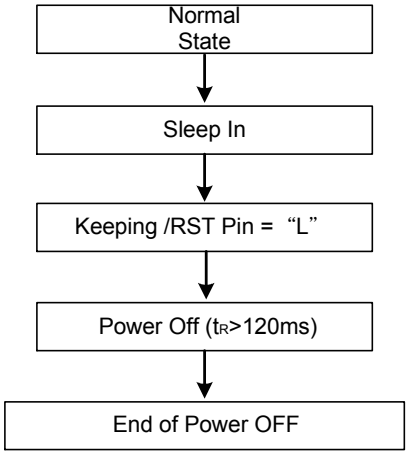

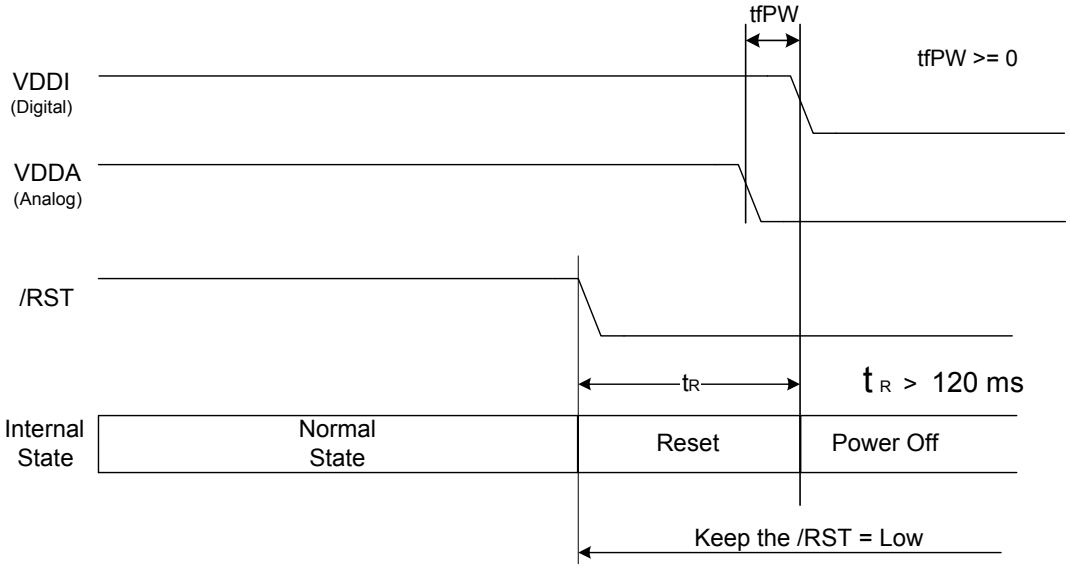

A9 –OTP Burning Flow:

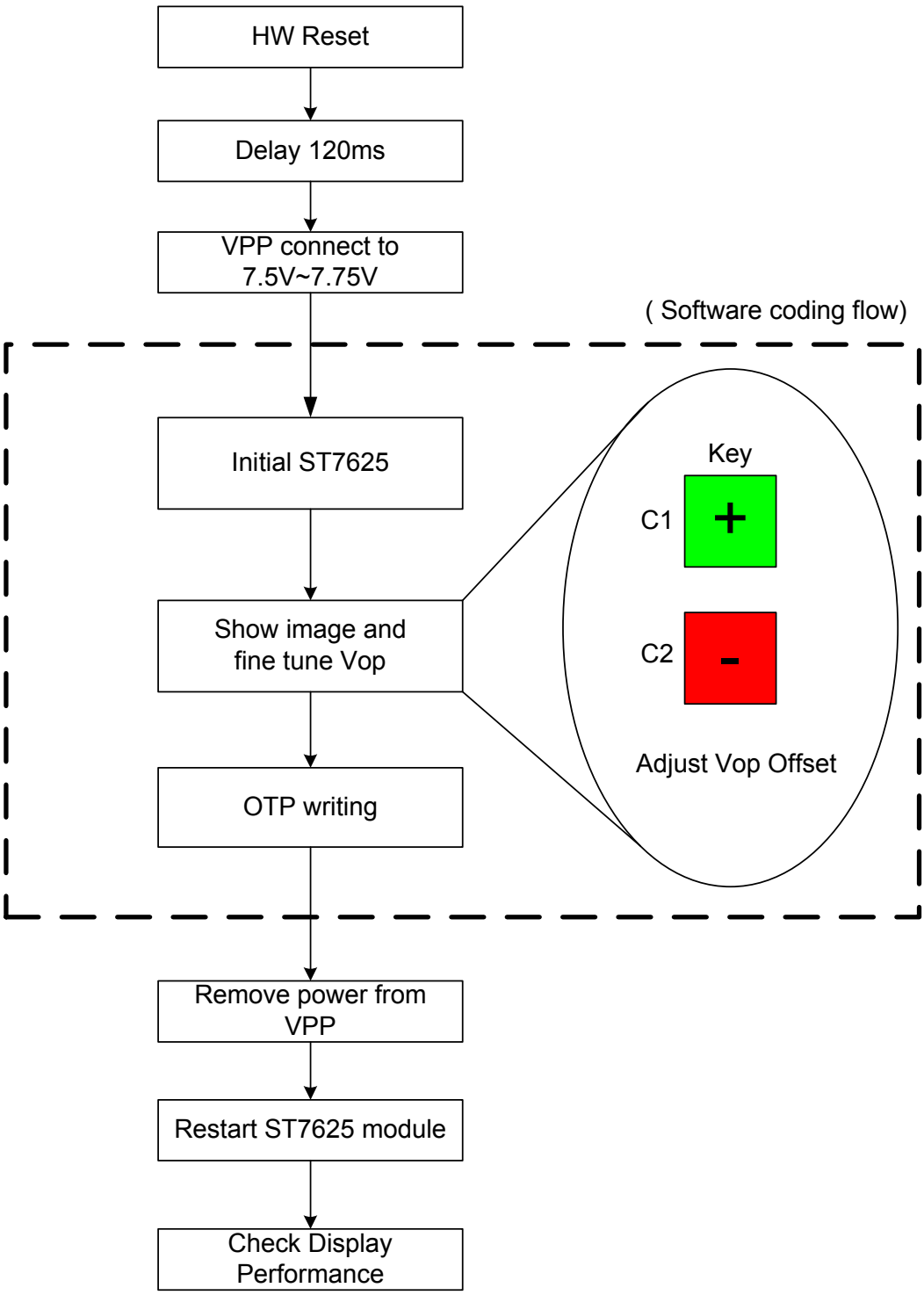

A10 – Software coding flow

```
void Initial_LCD_Module(void)
{
//-----------disable autoread + Manual read once ----------------------------
        Write(COMMAND,0xD7);            // Auto Load Set
        Write(DATA,0x1F);               // Auto Load Disable
        Write(COMMAND,0xE0);            // EE Read/write mode
        Write(DATA,0x00);               // Set read mode
        delayms(10);                    // Delay 10ms
        Write(COMMAND,0xE3);            // Read active
        delayms(20);                    // Delay 20ms
        Write(COMMAND,0xE1);            // Cancel control

//--------------------------------- Sleep OUT ---------------------------------------
        Write(COMMAND, 0x28 );          // Display Off
        Write(COMMAND, 0x11 );          // Sleep Out
        delayms(50);                    // Delay 50ms

//---------------------------Vop setting---------------------------------------------
        Write(COMMAND,0xC0);            //Set Vop by initial Module
        Write(DATA, 0xB9);              //Vop = 11V
        Write(DATA, 0x00);              // base on Module

//---------------------------Set   Register---------------------------------  -------
        Write(COMMAND,0xC3);            // Bias select
        Write(DATA,0x02);               // 1/10 Bias, base on Module
        Write(COMMAND,0xC4);            // Setting Booster times
        Write(DATA,0x07);               // Booster X 8
        Write(COMMAND,0xC5);            // Booster eff
        Write(DATA,0x01);               // BE = 0x01 (Level 2)
        Write(COMMAND,0xCB);            // Vg with booster x2 control
        Write(DATA,0x01);               // Vg from Vdd2
        Write(COMMAND,0xD0);            // Analog circuit setting
        Write(DATA,0x1D);               //
        Write(COMMAND,0x3A);            // Color mode = 65k
        Write(DATA,0x05);               //
        Write(COMMAND,0x36);            // Memory Access Control //
        Write(DATA,0x08);
        Write(COMMAND, 0xB5 );          // N-Line
        Write(DATA, 0x01);              // RST, 2-line inversion

        Write(COMMAND,0xF7 );           // command for temp sensitivity.
        Write(DATA,0x06);               //

        1.  Set Gamma table for Module, please refer spec setting.
        2.  Set Temp compensation for Module, please refer spec setting.

        Write(COMMAND,0x2A);            // Set COL By Module
        Write(DATA,0x00);               // 0~95
        Write(DATA,0x5F);               //

        Write(COMMAND,0x2B);            // Set Page By Module
        Write(DATA,0x00);               // 0~95
        Write(DATA,0x5F);               //
        Write(COMMAND, 0x29 );          // Display On
}
```

```
//--------------------------------Fine tune vop offset----------------------------------------
void Fine_Tune_Vop(void)
{
        Show_Image();                                   //Display a image
//------------------------------------- Display ON ---------------------------------------------
        Write(COMMAND, 0x29 );                          // Display On
//--------------------------------Fine tune Vop offset----------------------------------------
        Write( COMMAND, 0xC1);                          //Fine tuning Vop here by command
        or                                              0xc1(VopOffsetInc),0xc2(VopOffsetDec).
        Write( COMMAND, 0xC2);
        Note#1
}

void OTP_Writing(void)
{
//--------------------------------Display OFF----------------------------------------
        Write(COMMAND, 0x28 );                          // Display Off
        Delayms(50);                                    // delay 50ms
//--------------------------------OTP writing----------------------------------------
        Write( COMMAND, 0x00F0 );                       // Keep Frame Rate
        Write( DATA, 0x0012 );                          //
        Write( DATA, 0x0012 );
        Write( DATA, 0x0012 );
        Write( DATA, 0x0012 );
        Write( COMMAND, 0x00E4 );                       //OTP selection
        Write( DATA, 0x0058 );                          // Select OTP
        Write( COMMAND, 0x00E5 );                       // Set OTP writing setup
        Write( DATA, 0x0009 );
        Write( COMMAND, 0x00E0 );                       // Read/write mode setting
        Write( DATA, 0x0020 );                          // Set Write mode
        Delayms(100);                                   //Delay 100ms
        Write( COMMAND, 0x00E2 );                       // Write active
        Delayms(100);                                   //Delay 100ms
        Write( COMMAND, 0x00E1 );
}
```

Note:

#1. In this section"+" & "-" key button, please execute Write(COMMAND,0xC1) to increase one step at Vop and execute Write(COMMAND,0xC2) to decrease one step at Vop, if necessary.

#2. TC is turned on in burning flow. If LCD module is too dark or bright, it's an effect of backlight.

ST7625 Specification Revision History		
Version	**Date**	**Description**
0.x		Preliminary version
1.0	2007/2/14	First issue
1.1	2007/5/9	Redefine the programming mechanism of non-volatility memory.
1.2	2007/6/5	1. Add cmd E5 description 2. 8080 interface timing modify
1.3	2007/8/22	Add ST7625-G3 and ST7625-G4 description.