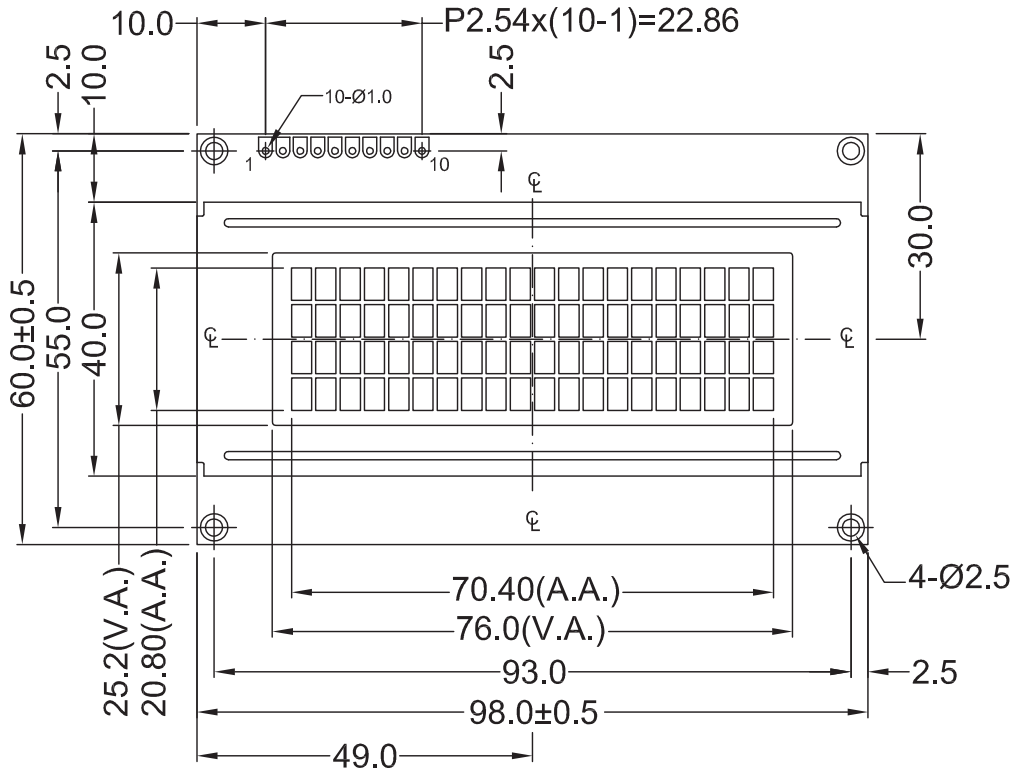

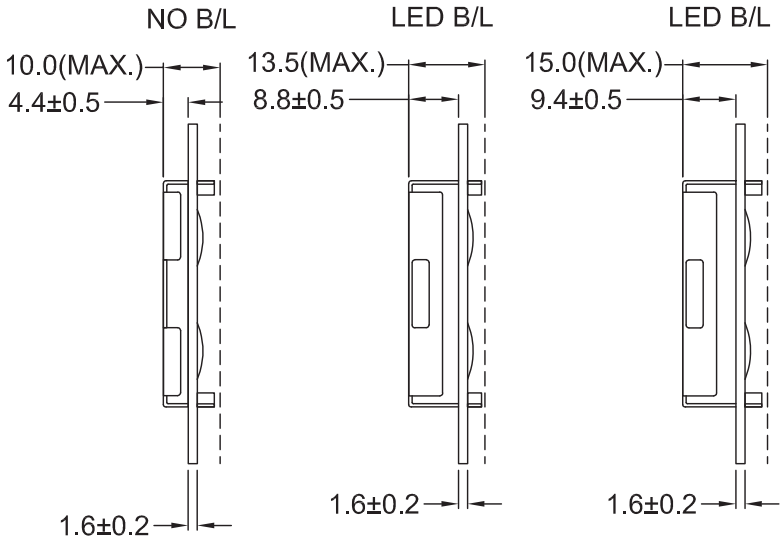

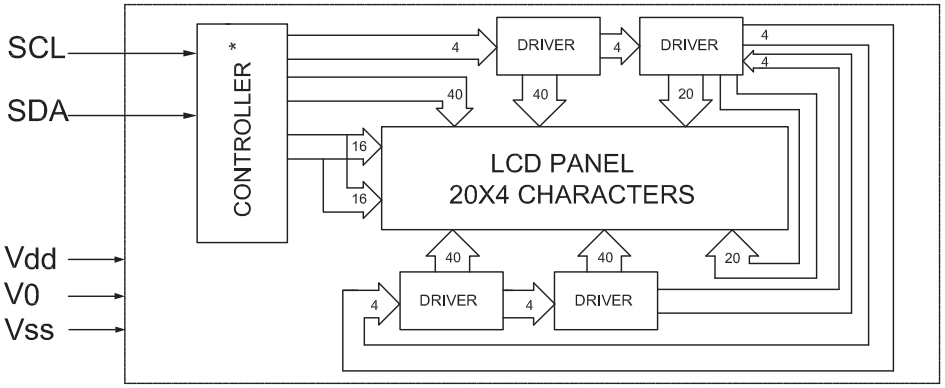

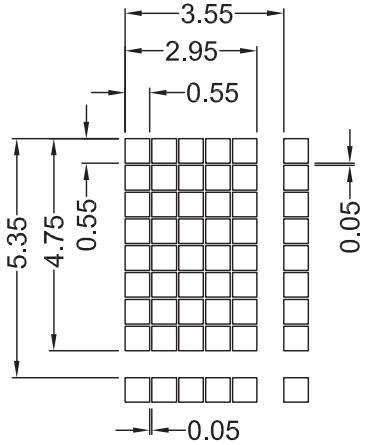

Pin No	Symbol
1	A
2	K
3	Vss
4	Vdd
5	SDA
6	SCL
7	V0
8	NC
9	NC
10	NC