ORIENT DISPLAY (North America) Limited

AMG20232A

Unmarked tolerance ± 0.3

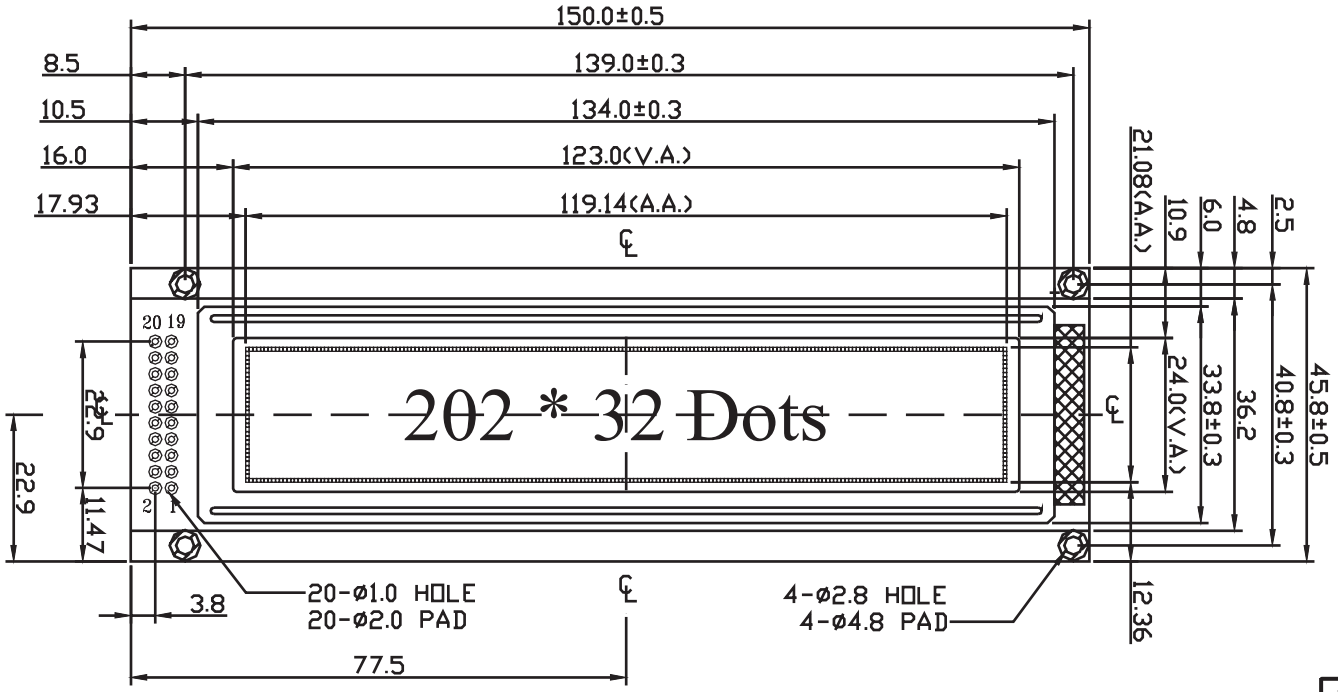

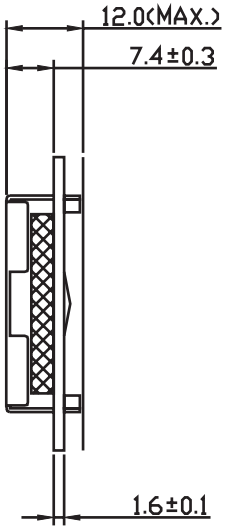

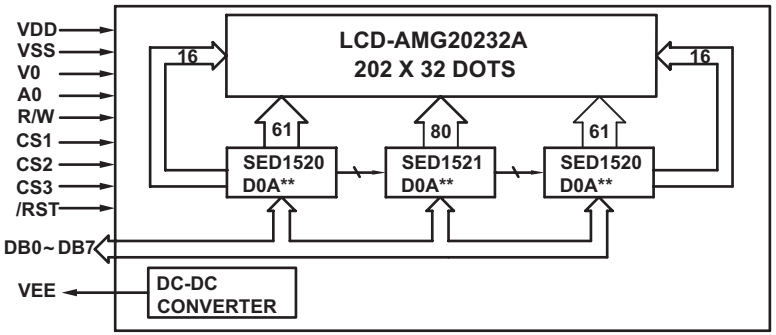

** OR EQUIVALENT

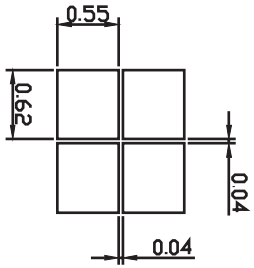

Pin No	Symbol	Pin No	Symbol
1	VSS	11	DB4
2	VDD	12	DB5
3	V0	13	DB6
4	A0	14	DB7
5	R/W	15	VEE
6	CS1	16	/RST
7	DB0	17	A
8	DB1	18	K
9	DB2	19	CS2
10	DB3	20	CS3