ORIENT DISPLAY (North America) Limited

AMG128128A

Unmarked tolerance ± 0.3

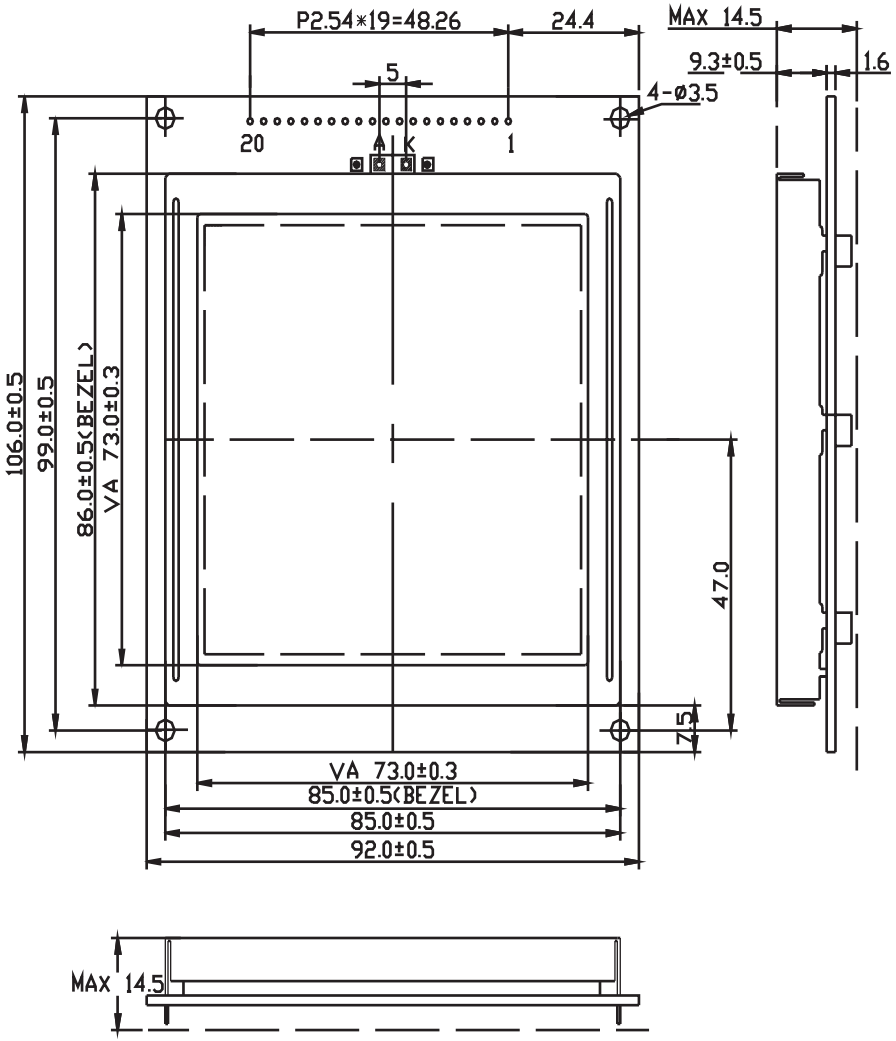

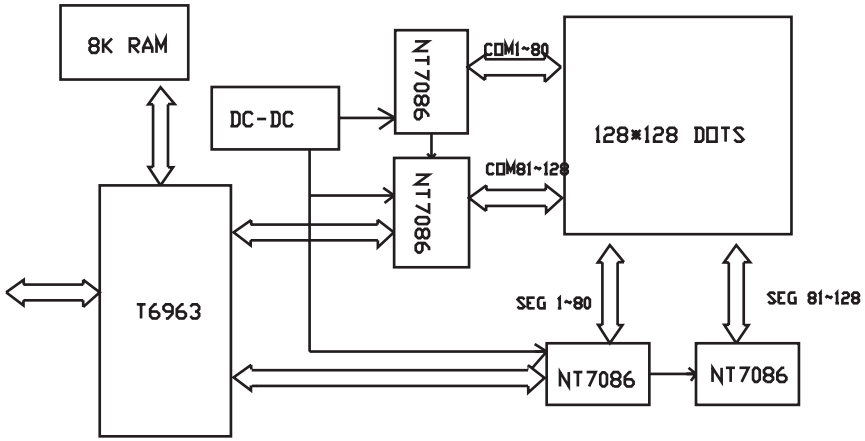

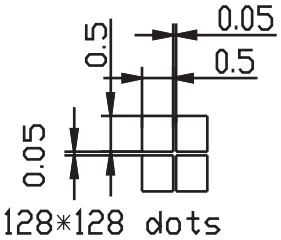

Pin No	Symbol	Pin No	Symbol
1	FGND	11	DB1
2	GND	12	DB2
3	VDD	13	DB3
4	V0	14	DB4
5	$\overline{WR}$	15	DB5
6	$\overline{RD}$	16	DB6
7	$\overline{CE}$	17	DB7
8	C/D	18	FS
9	$\overline{RST}$	19	VEE
10	DB0	20	$\overline{HALT}$