ORIENT DISPLAY (North America) Limited

AMC2004E

Unmarked tolerance ± 0.3

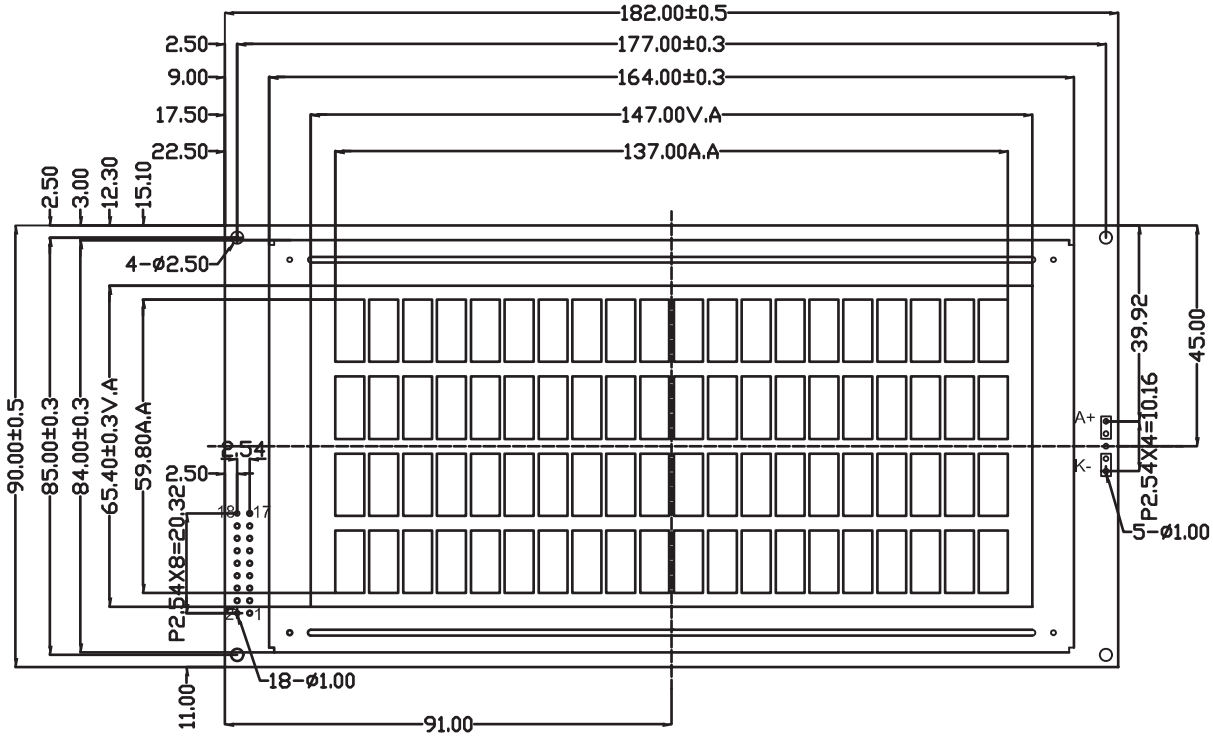

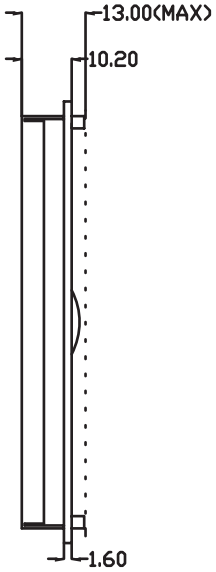

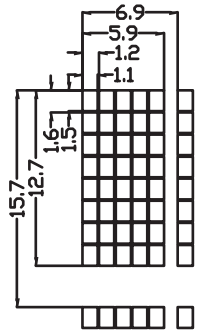

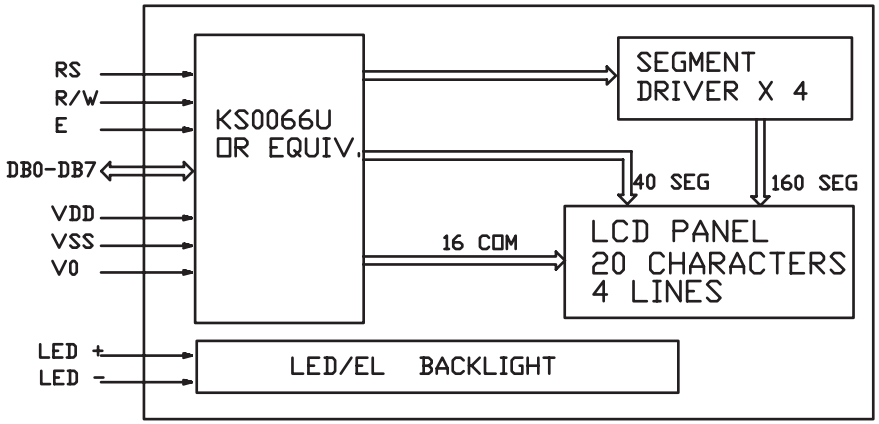

Pin No	Symbol	Pin No	Symbol
1	VSS	10	DB3
2	VDD	11	DB4
3	V0	12	DB5
4	RS	13	DB6
5	R/W	14	DB7
6	E	15	LED+
7	DB0	16	LED–
8	DB1	17	LED+
9	DB2	18	LED–