ORIENT DISPLAY (North America) Limited

AMC2004A-S2

Unmarked tolerance ± 0.3

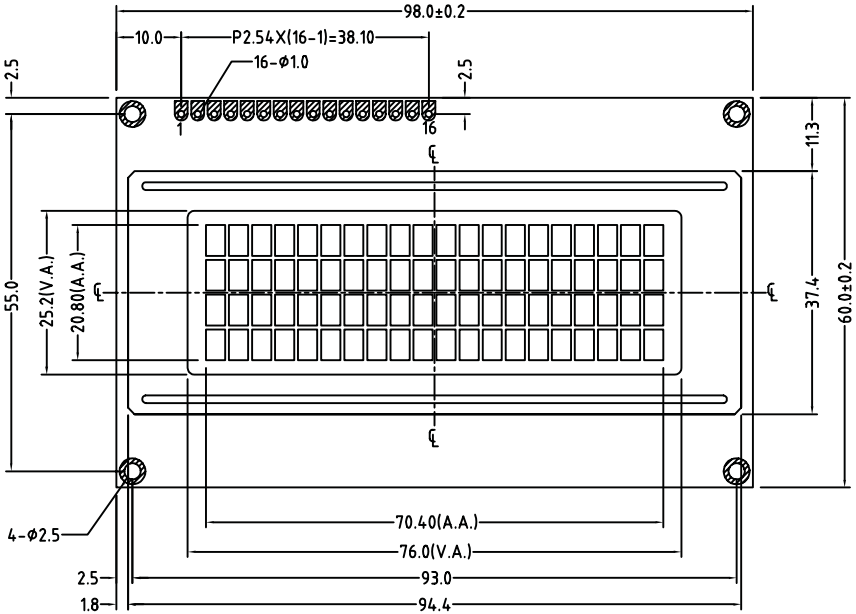

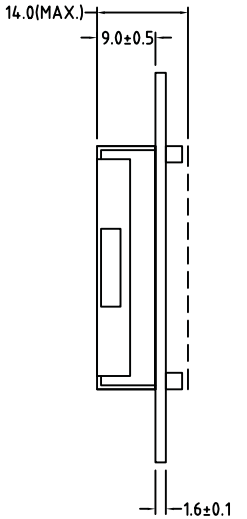

WITH LED BACKLIGHT

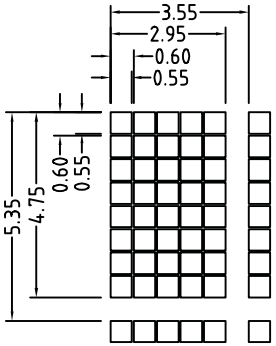

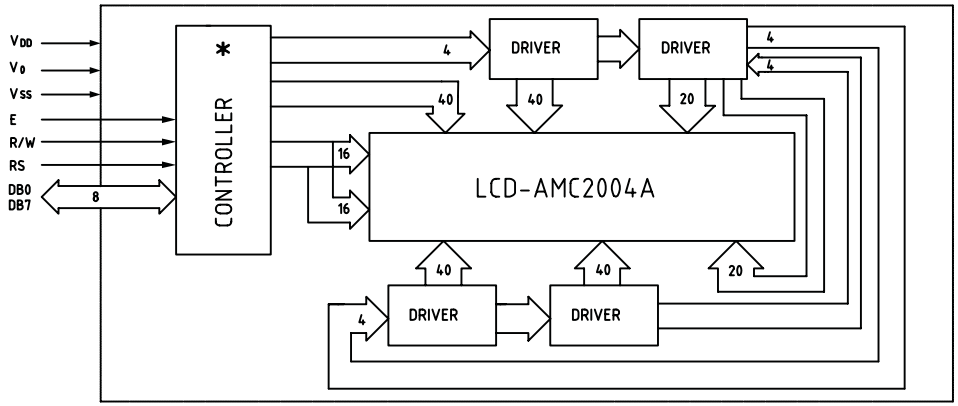

* SPLC780 OR EQUIVALENT

Pin No	Symbol	Pin No	Symbol
1	VSS	9	DB2
2	VDD	10	DB3
3	V0	11	DB4
4	RS	12	DB5
5	R/W	13	DB6
6	E	14	DB7
7	DB0	15	LED(+)
8	DB1	16	LED(−)