ORIENT DISPLAY (North America) Limited

AMC2002G

Unmarked tolerance ± 0.3

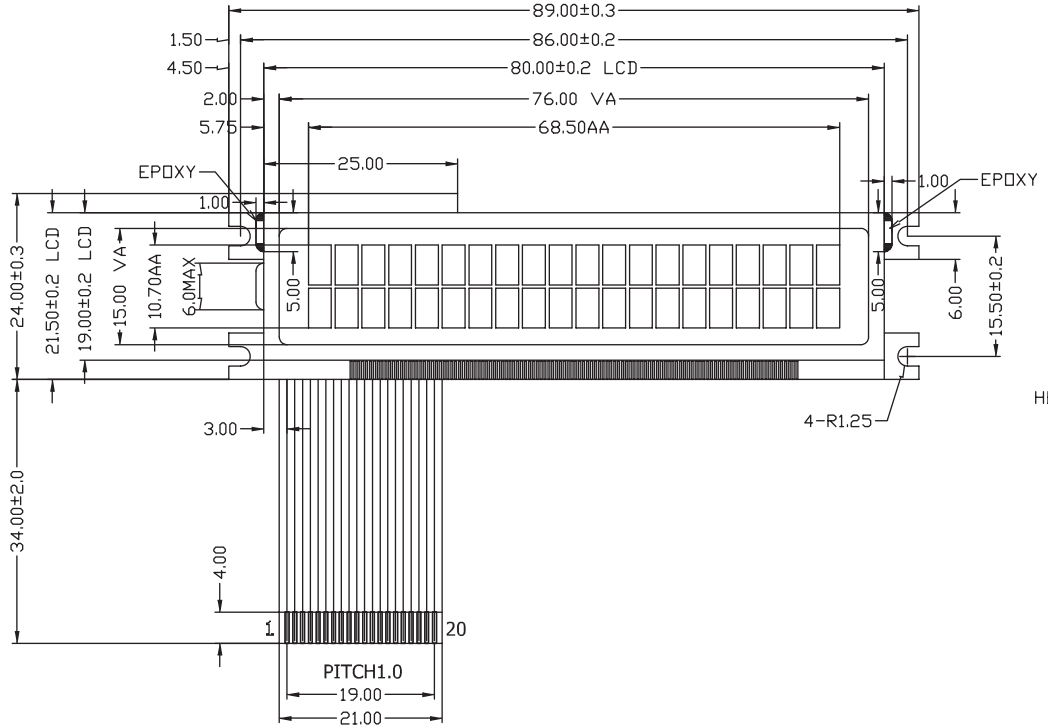

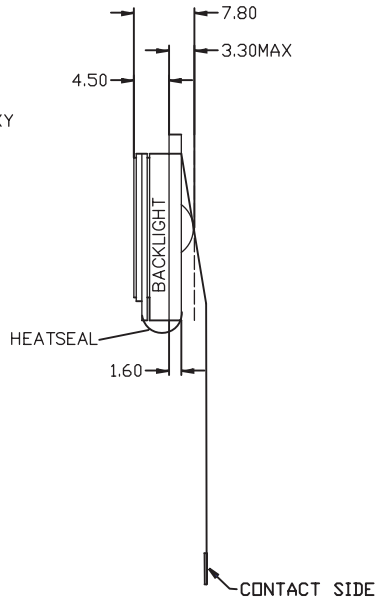

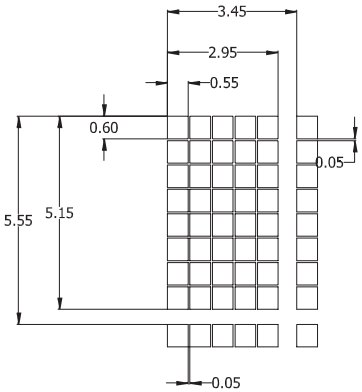

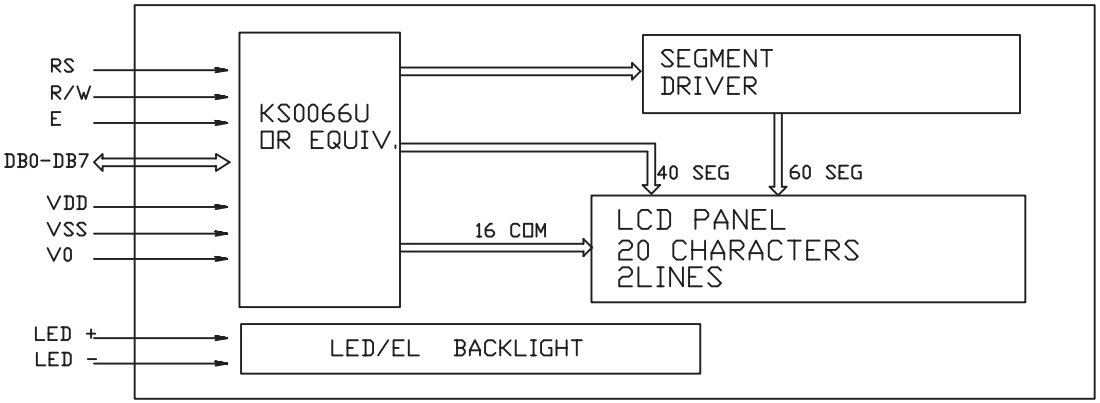

Pin No	Symbol	Pin No	Symbol
1	NC	11	DB2
2	NC	12	DB3
3	VSS	13	DB4
4	VDD	14	DB5
5	Vo	15	DB6
6	RS	16	DB7
7	R/W	17	A
8	E	18	K
9	DB0	19	VEE
10	DB1	20	NC