ORIENT DISPLAY (North America) Limited

AMC1602A

Unmarked tolerance ± 0.3

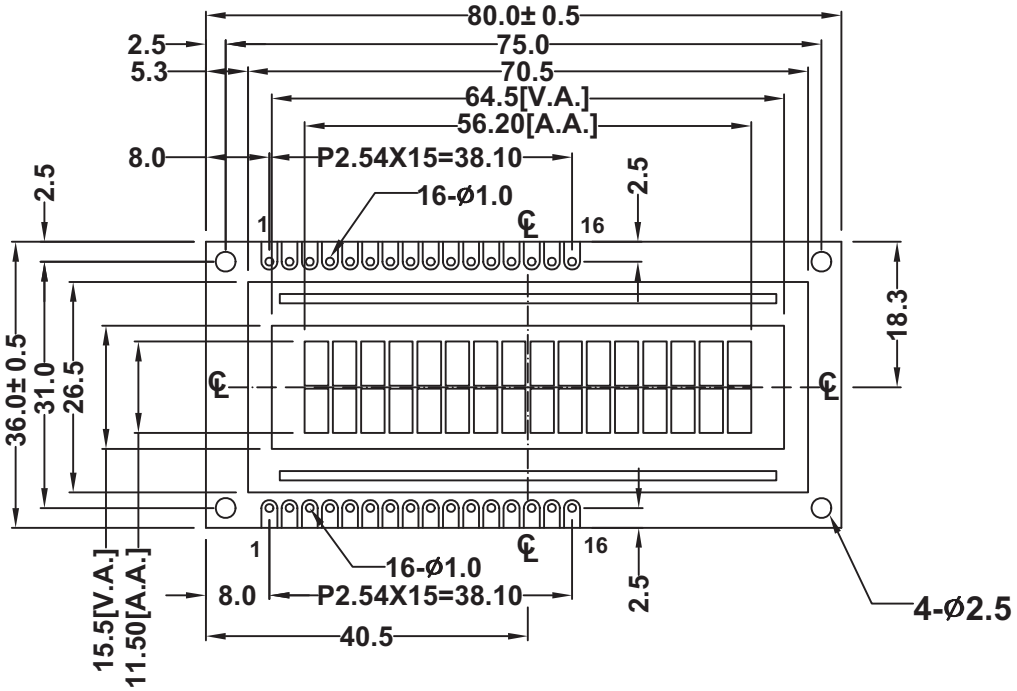

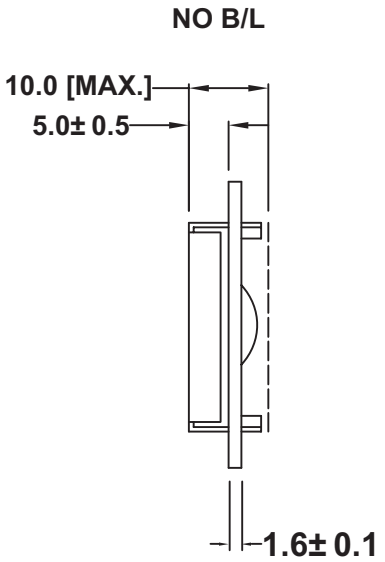

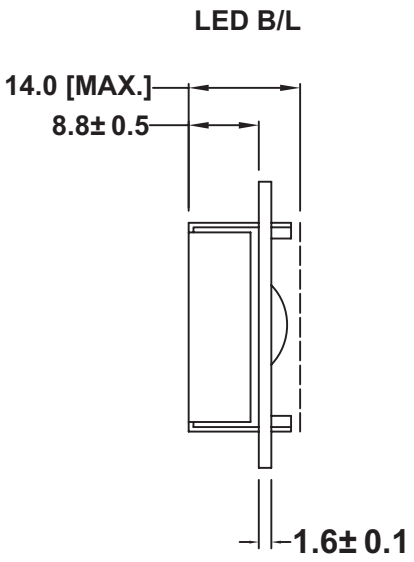

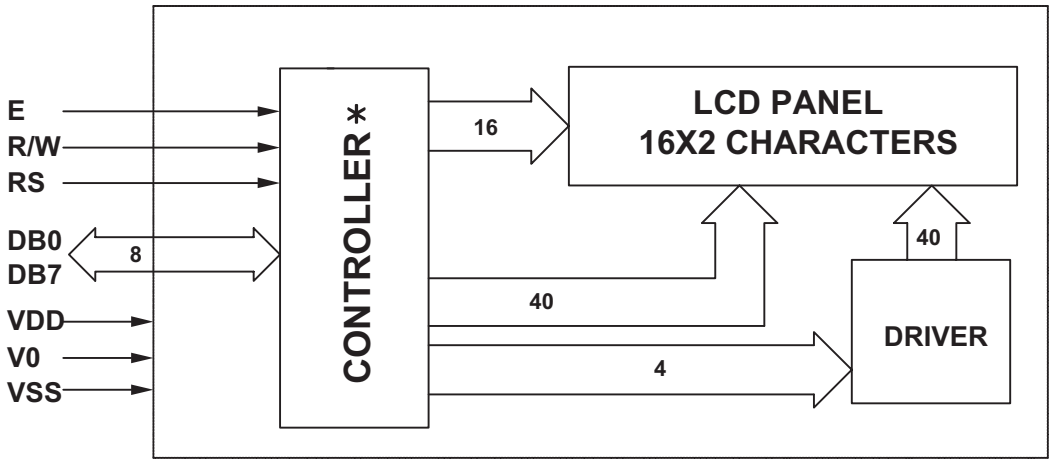

* S6A0069 OR EQUIVALENT

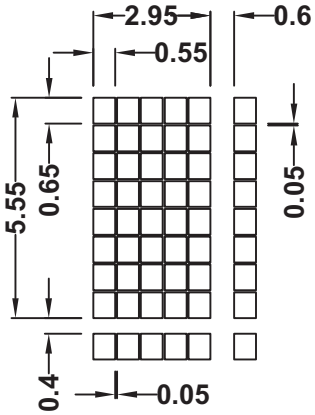

Pin No	Symbol	Pin No	Symbol
1	VSS	9	DB2
2	VDD	10	DB3
3	Vo	11	DB4
4	RS	12	DB5
5	R/W	13	DB6
6	E	14	DB7
7	DB0	15	A
8	DB1	16	K