ORIENT DISPLAY (North America) Limited

# AMC0801A-S1

Unmarked tolerance ± 0.3

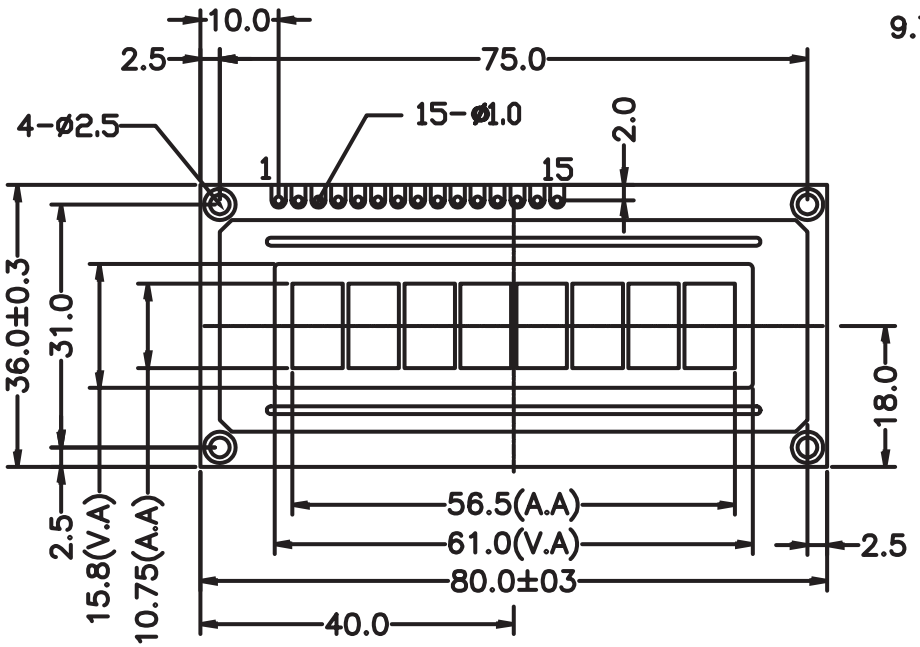


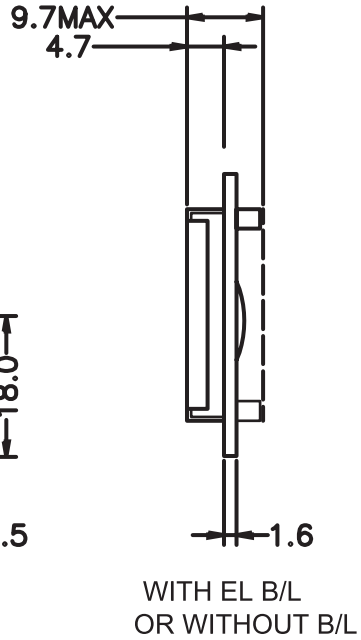


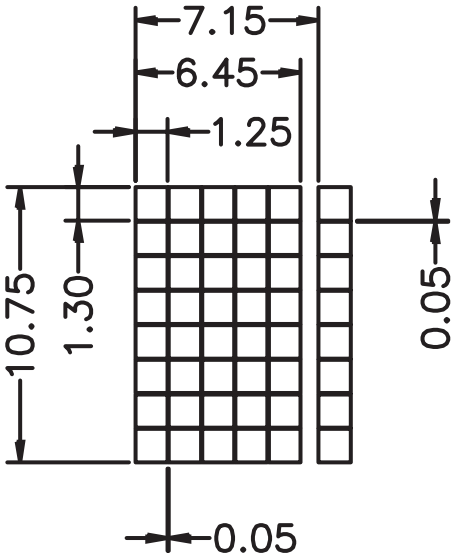


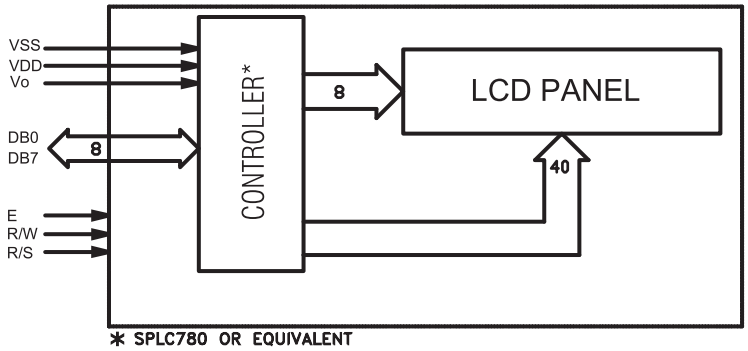


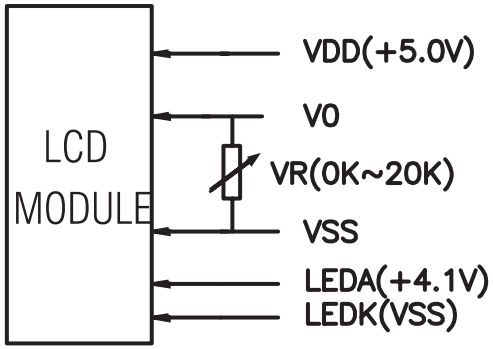


| Pin No | Symbol | Pin No | Symbol |
|---|---|---|---|
| 1 | VSS | 9 | DB2 |
| 2 | VDD | 10 | DB3 |
| 3 | Vo | 11 | DB4 |
| 4 | RS | 12 | DB5 |
| 5 | R/W | 13 | DB6 |
| 6 | E | 14 | DB7 |
| 7 | DB0 | 15 | LEDA |
| 8 | DB1 | | |