ORIENT DISPLAY (North America) Limited

AF240320A-28

Unmarked tolerance ± 0.3

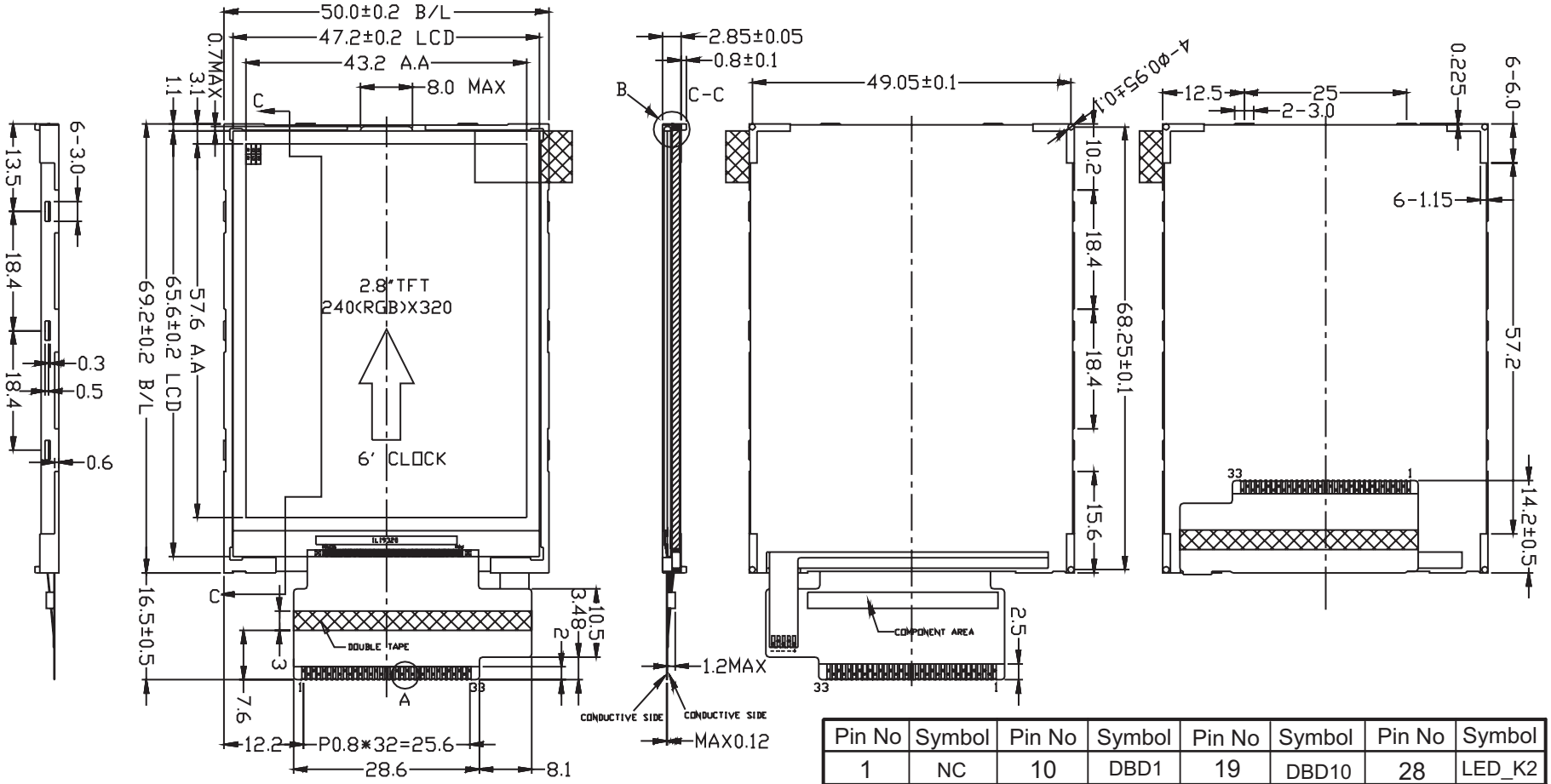

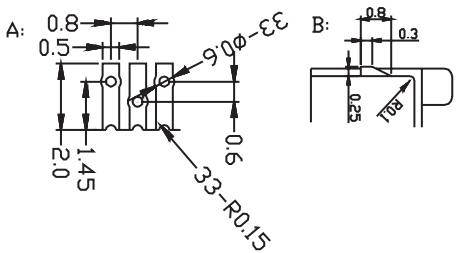

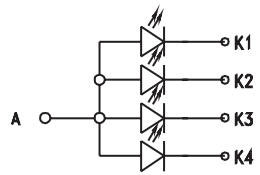

CIRCUIT DIAGRAM

Pin No	Symbol	Pin No	Symbol	Pin No	Symbol	Pin No	Symbol
1	NC	10	DBD1	19	DBD10	28	LED_K2
2	VDD	11	DBD2	20	DBD11	29	LED_K3
3	VDD	12	DBD3	21	DBD12	30	LED_K4
4	/CS	13	DBD4	22	DBD13	31	GND
5	RS	14	DBD5	23	DBD14	32	GND
6	/WR	15	DBD6	24	DBD15	33	NC
7	RD	16	DBD7	25	GND		
8	/RESET	17	DBD8	26	LED_A		
9	DBD0	18	DBD9	27	LED_K1		