# DM12232S

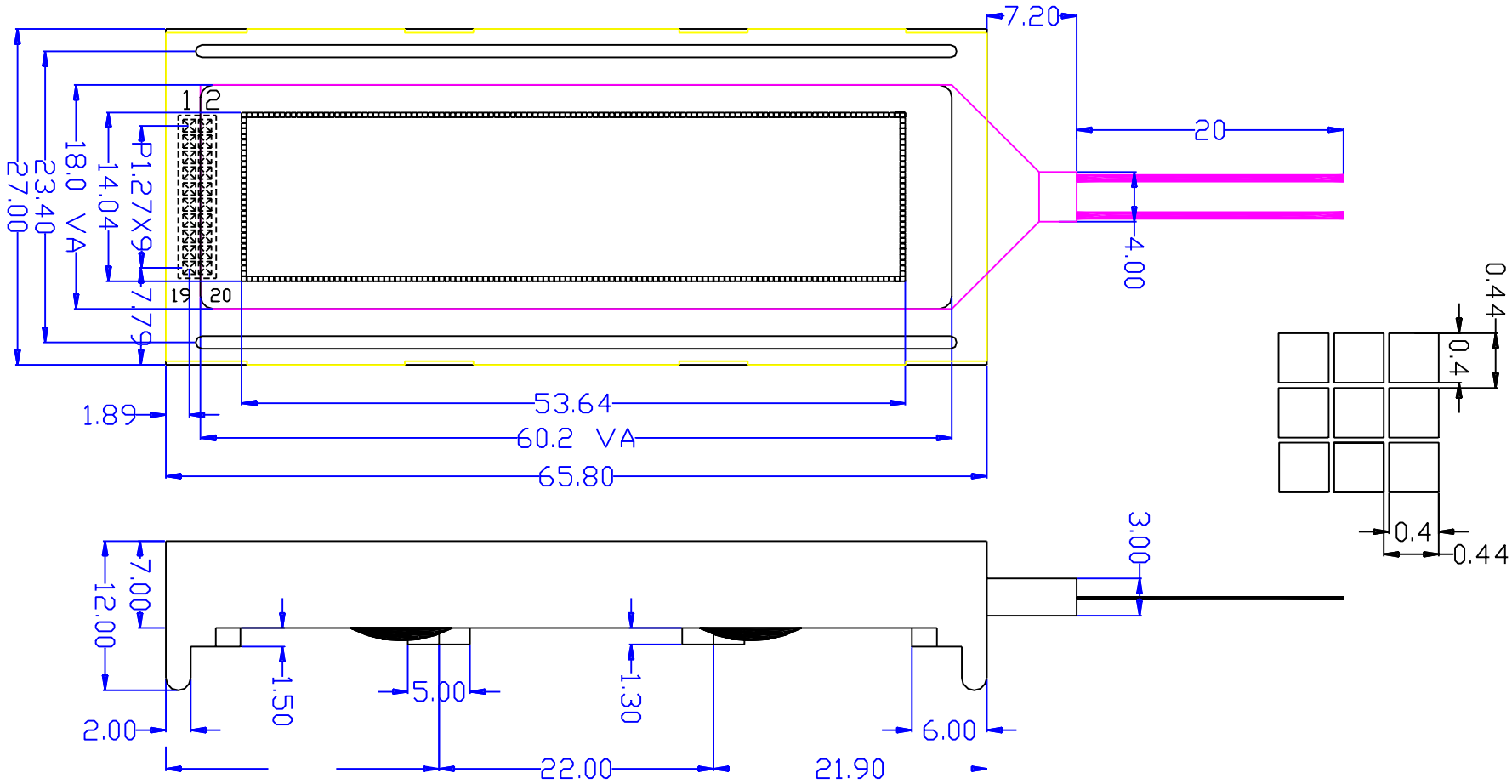


SPECIFITION:

1. DISPLAY TYPE: GRAY STN, TRANSFLECTIVE WITH LED BACKLIGHT
2. DRIVING METHOD: V0=4.8V, 1/32 DUTY, 1/5 BIAS, VIEW DIRECTION: 6H
3. LCD DRIVER: SED1520
4. OPERATION TEMPERATURE: 0~+50 °C
   STORAGE TEMPERATURE: -10~+60 °C
5. INTERFACE 6,Connector: Samtec#1 FTS-110-01-F-DV

| 1 | 2 | 3 | 4 | 5 | 6 | 7 | 8 | 9 | 10 | 11 | 12 | 13 | 14 | 15 | 16 | 17 | 18 | 19 | 20 |
|---|---|---|---|---|---|---|---|---|---|---|---|---|---|---|---|---|---|---|---|
| RS | E2 | E1 | NC | NC | R/W | VSS | DB0 | DB1 | DB2 | DB3 | DB4 | DB5 | DB6 | DB7 | VDD | RES | V0 | / | / |