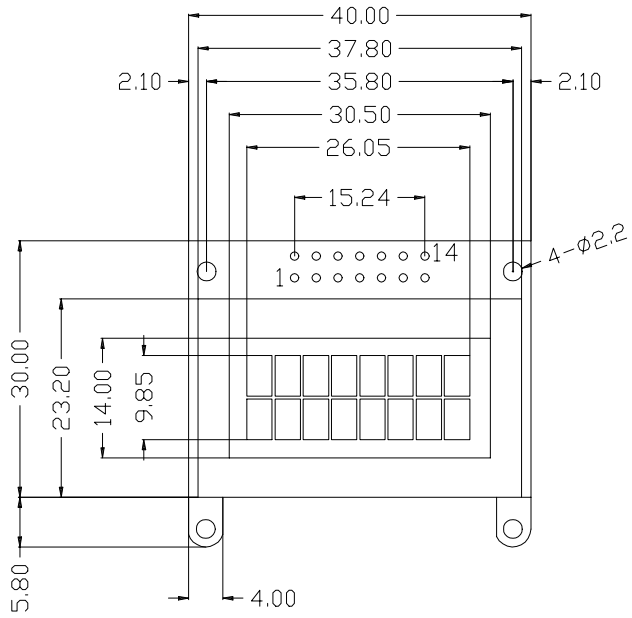

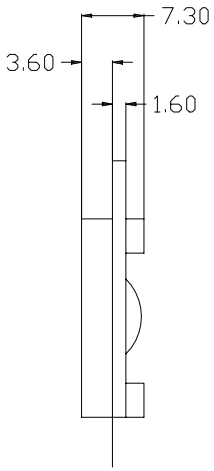

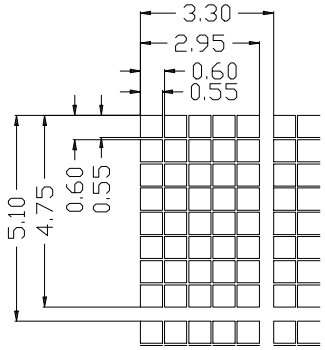

PIN NO.	1	2	3	4	5	6	7
FUNCTION	Vss	Vdd	V0	RS	R/W	E	DB0
PIN NO.	8	9	10	11	12	13	14
FUNCTION	DB1	DB2	DB3	DB4	DB5	DB6	DB7

SPECIFICATIONS:

1. DISPLAY: 8 CH X 2 LINES
2. LCD PANEL: YELLOW/GREEN STN
3. BACKLIGHT: WITHOUT
4. LCD DRIVER: KS0066U-00
5. TEMPERATURE: -10-60C (OPERATING)
   -20-80C (STORAGE)

ORIENT DISPLAY CO.,LTD.

PART NO.	OD-DM0802C-D-YSNRN-00	
DESIGN		2001-7-26
CHECK		
APPROVE		REV: A

ALL DIMENSIONS IN MM. TOLERANCES ARE ±0.3MM.