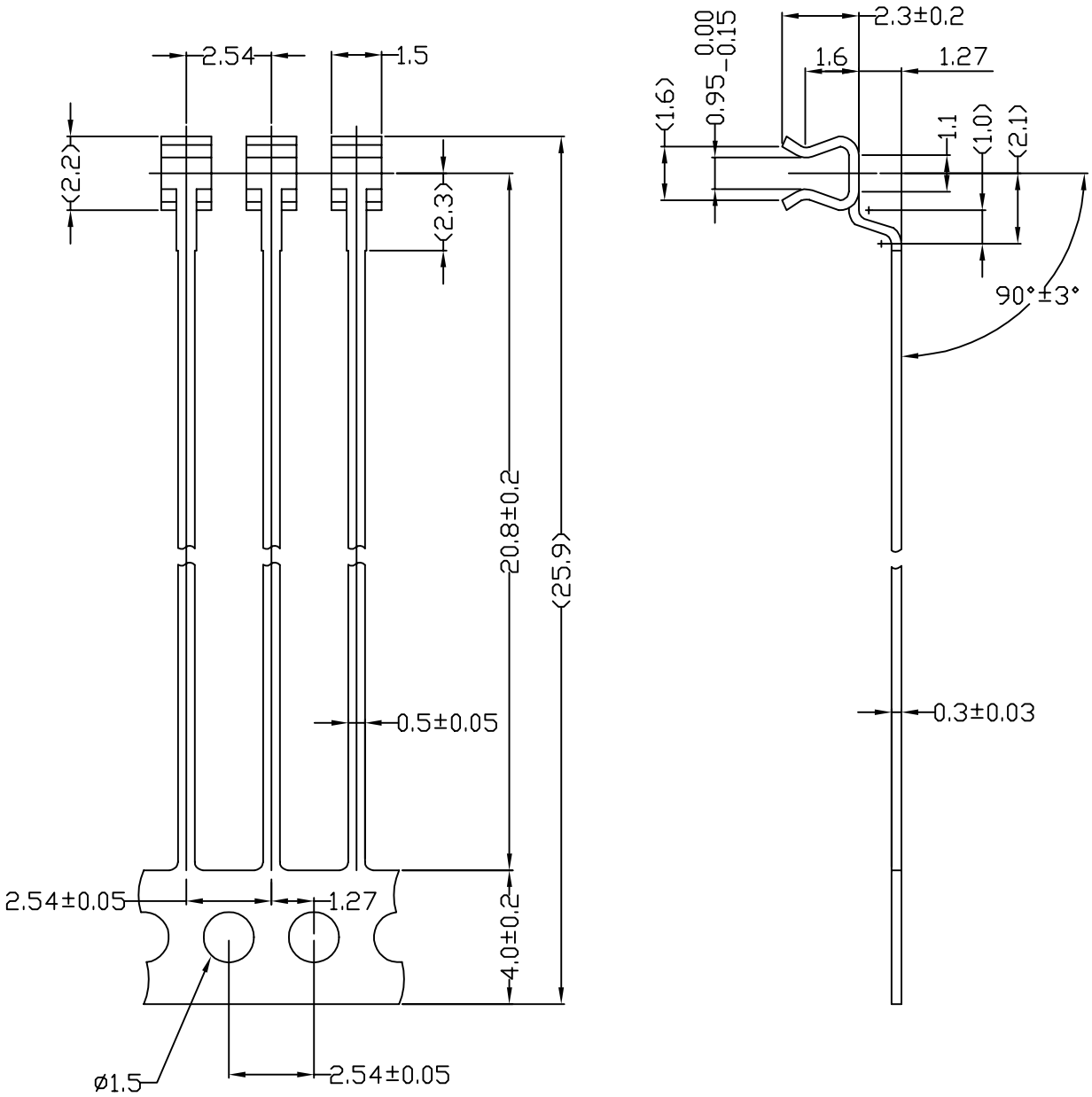

ALLOWANCE	F	G	H	J	K	L	M	N
UNDER 8	±0.05	±0.1	±0.1	±0.2	±0.2	±0.4	±0.4	±1.0
8 TO 25	0.08	0.15	0.15	0.3	0.3	0.6	0.6	1.5
25 TO 80	0.12	0.2	0.25	0.4	0.5	0.8	1.0	2.0
80 TO 250	0.25	0.3	0.4	0.6	0.8	1.2	1.5	3.0
250 TO 800	0.5	0.6	0.8	1.0	1.5	2.0	3.0	6.0
800 TO 2500	1.0	1.0	1.5	1.7	3.0	4.0	6.0	12.0
OVER 2500	2.0	2.0	3.0	3.0	6.0	8.0	12.0	24.0

REV	ZONE - CHANGES	ER*	DATE
			99/11/2

NEXT ISSUED ..

UNLESS OTHERWISE STATED:
1/ WALL THICKNESS:
2/ ALL DIM. IN MM
3/ TOLERANCE:
X.X+/−
XX.X+/−
XXX.X+/−
4/ TEXTURE:
5/ COATING:
6/ DRAFT ANGLE:
7/ UNSPECIFIED CORNER:

AV DISPLAY (North America) Ltd

FINISH		TITLE	Pin-351-1.0
DRAWN	WU	MODEL	DWG NO.
CHECK		SCALE: 5:1	REV. A PAGE 1 OF 1
APPROVAL		MAT'L & COLOR	