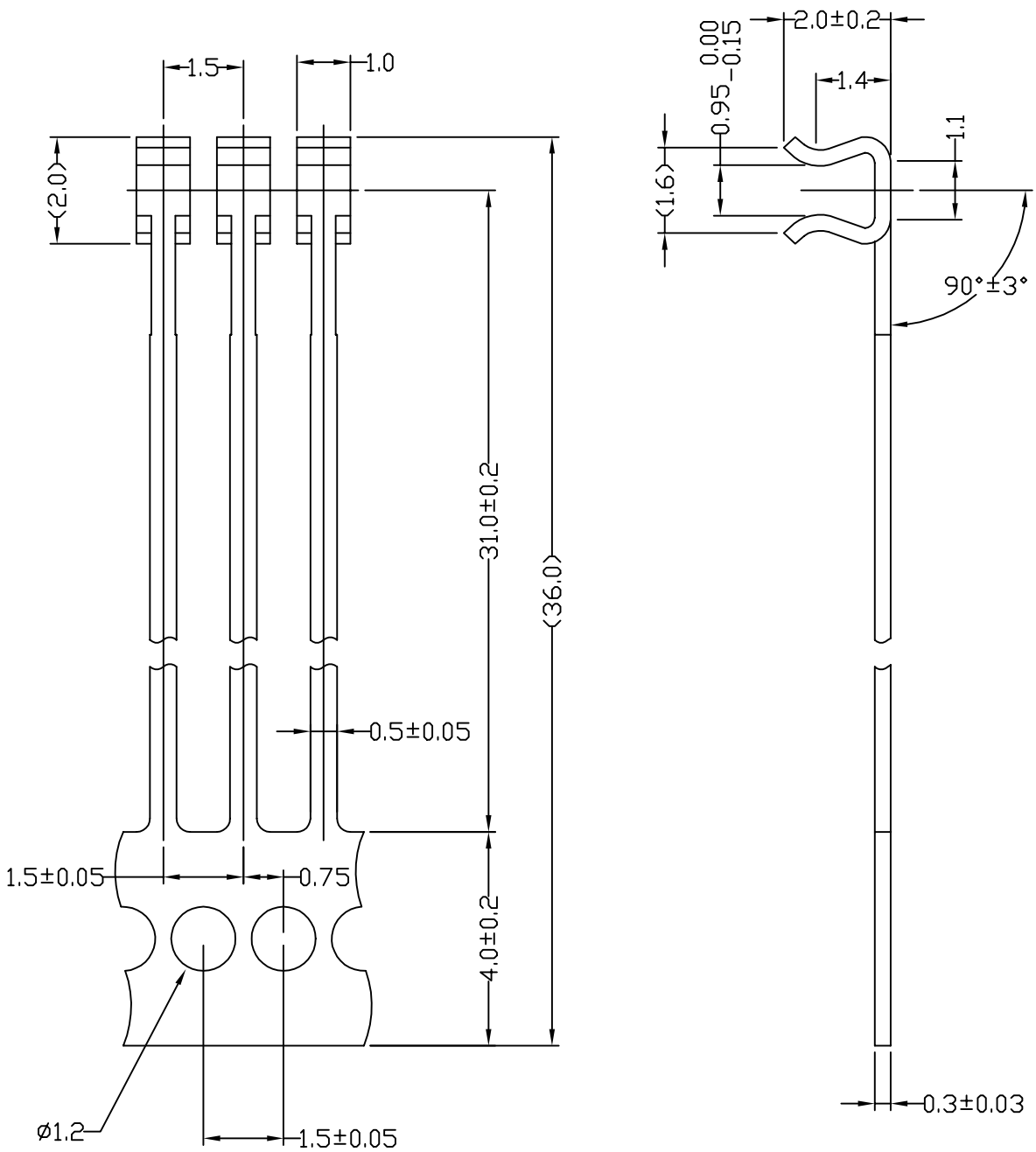

ALLOWANCE	F	G	H	J	K	L	M	N
UNDER 8	±0.05	±0.1	±0.1	±0.2	±0.2	±0.4	±0.4	±1.0
8 TO 25	0.08	0.15	0.15	0.3	0.3	0.6	0.6	1.5
25 TO 80	0.12	0.2	0.25	0.4	0.5	0.8	1.0	2.0
80 TO 250	0.25	0.3	0.4	0.6	0.8	1.2	1.5	3.0
250 TO 800	0.5	0.6	0.8	1.0	1.5	2.0	3.0	6.0
800 TO 2500	1.0	1.0	1.5	1.7	3.0	4.0	6.0	12.0
OVER 2500	2.0	2.0	3.0	3.0	6.0	8.0	12.0	24.0

REV	ZONE - CHANGES	ER*	DATE
			99/10/29

NEXT ISSUED ..

UNLESS OTHERWISE STATED:
1/ WALL THICKNESS:
2/ ALL DIM. IN MM
3/ TOLERANCE:
X.X+/-
XX.X+/-
XXX.X+/-
4/ TEXTURE:
5/ COATING:
6/ DRAFT ANGLE:
7/ UNSPECIFIED CORNER:

FINISH		
DRAWN	WU	
CHECK		
APPROVAL		

AV DISPLAY (North America) Ltd

TITLE	Pin-152-1.0	
MODEL		DWG NO.
SCALE:	8:1	REV. A PAGE 1 OF 1
MAT'L & COLOR		